CODE V0169005

USER MANUAL

XXF 250 XXF 450
XEF 250 XEF 450

⚠ READ THIS MANUALE CAREFULLY BEFORE OPERATING THIS VEHICLE

EN

FANTIC

FANTIC WANTS TO THANK YOU

for choosing one of its products.

We recommend that you read this manual before driving your vehicle. It contains information, advice and warnings on the vehicle maintenance and use. The instructions in this manual have been prepared to give you a simple and clear guide for use. We are sure that taking it into consideration you will gain confidence with your new vehicle, which you can use for a long time and with full satisfaction.

MANUFACTURER DATA AND EDITION

Fantic Motor
Via Tarantelli, 7
31030 - Dosson di Casier (TV) Italy
Tel. +39 0422 634192
Fax +39 0422 1830124
E-mail: info@fanticmotor.it
www.fantic.com

Edition: 00/2023.
Code: V0169005.

Introduction

This manual was prepared by **Fantic Motor** for use by **Fantic Motor** dealers and their specialized personnel. It is assumed that those who use this documentation for repair and maintenance of **Fantic Motor** vehicles have a basic knowledge of the principles and mechanical procedures regarding vehicle repair techniques. In the absence of these notions, repair or maintenance may be inadequate or dangerous.

Fantic Motor is constantly committed in improving its production. Any significant modifications and changes introduced with regard to vehicle characteristics and repair procedures will be brought to the attention of all **Fantic Motor** dealers and will be published in future editions of the manual.

Fantic Motor reserves the right to modify and make changes, at any time and without notice, to the models described, specifications and design data, guaranteeing the essential characteristics described and illustrated in this manual.

Operators have the obligation to read the manual and to scrupulously follow the instructions given. The manufacturer is not responsible for damages caused to people and/or things and is not responsible for damages to the product, if the instructions given in this manual are not observed.

This publication, or part of it, cannot be reduced or translated without the Fantic Motor's approval. Reproduction of the contents used in this manual without the Manufacturer's permission is prohibited. Fantic Motor assumes no responsibility for printing errors and omissions. All rights reserved.

1. General information 8
1.1 Warnings 8
1.2 Symbols used in the manual 10
1.3 Behaviour and driving 11
Vehicle use 11
Getting on 11
Getting off 11
1.4 Frame number 12
1.5 Engine number 12
XXF 250 / XEF 250 versions 12
XEF 450 version 12
XXF 450 version 12
1.6 Location of important labels 13
1.7 Vehicle component location 15
Handlebar components (XEF 250 version) 15
Right and left side components (XEF 250 version) 16
Handlebar components (XXF 250 version) 17
Right and left side components (XXF 250 version) 18
Handlebar components (XEF 450 version) 19
Right and left side components (XEF 450 version) 20
Handlebar components (XXF 450 version) 21
Right and left side components (XXF 450 version) 22
1.8 Technical data 23
Technical Data (versions XXF 250 / XEF 250) 23
Technical Data (versions XXF 450 / XEF 450) 26
1.9 Tightening torques 29
Engine tightening torques (XEF 250 / XEF 450 versions) 29
Chassis tightening torques (XEF 250 / XEF 450 versions) 32
Engine tightening torques (XXF 250 version) 35
Chassis tightening torques (XXF 250 version) 37
Engine tightening torques (XXF 450 version) 40
Chassis tightening torques (XXF 450 version) 42
Electrical tightening torques (all versions) 44
1.10 Maintenance limits 45
Engine (XXF 250 / XEF 250 versions) 45
Motore (XXF 450 / XEF 450 versions) 47
Chassis 50
Electrical 53
1.11 Electrical system diagram 55
Cables colour coding 55
Key to the wiring diagram components (XXF 250 version) 56
Wiring, harnesses and electrical extensions legend (XXF 250 version) 56
Wiring diagram (XXF 250 version) 57
Key to the wiring diagram components (XXF 450 version) 58
Wiring diagram (XXF 450 version) 59
Key to the wiring diagram components (XXF 250 / XEF 450 versions) 60
Wiring diagram (XXF 250 / XEF 450 versions) 62
1.12 Lamps (for XEF 250 / XEF 450 versions only) 64

1.13 Fuses 64
1.14 Recommended lubricants and liquids 65
1.15 Maintenance intervals 66
Periodic maintenance chart for the emission control system (for XEF 250 / XEF 450 versions only) 66
General maintenance and lubrication chart (for XEF 250 / XEF 450 versions only) 66
Maintenance intervals for competition use (XEF 250 / XEF 450 versions) 68
Maintenance intervals (XXF 250 / XXF 450 versions) 71

2. Use of the vehicle 74

2.1 Pre-operation inspection and maintenance 74
2.2 Running in 74
2.3 Refuelling 75
2.4 Starting the engine 76
Starting a cold engine 76
Starting a warm engine 76
2.5 Stop the engine 77
2.6 Main components 77
Engine stop switch(XEF 250 / XEF 450 versions) 77
Engine stop switch (XXF 250 version) 78
Engine stop switch (XXF 450 version) 78
Clutch lever 78
Shift pedal (XXF 250 / XEF 250 versions) 78
Shift pedal (XEF 450 version) 79
Shift pedal (XXF 450 version) 79
Throttle grip 79
Front brake lever 79
Start button (XEF 250 / XEF 450 versions) 80
Start button (XXF 250 version) 80
Start button (XXF 450 version) 80
Launch/traction control system (XXF 250 version) 80
Launch/traction control system (XXF 450 version) 81
Engine mapping selection switch (XXF 250 version) 81
Engine mapping selection switch (XXF 450 version) 81
Rear brake pedal 82
Start knob (air valve) 82
Sidestand (XEF 250 / XEF 450 versions) 82
Locking device (XEF 250 / XEF 450 versions) 83
2.7 Dashboard (for XEF 250 / XEF 450 versions only) 84
Basic functions 84
Function, setting instructions 84
Meter size 85
Select button function instruction 85
Adjust button function instruction 85
The settings screen description 86
Enter settings and function index menu 86
Circumference and sensing pointsetting 86
RPM pulse setting 87
Funzioni non attive 87

Backlight brightness setting 87
Oil maintenance mileage setting 88
Speed unit setting 88
External ODO 88
Internal ODO 89
Trouble shooting 89
Dashboard setting values 89

3. Adjustments 90

3.1 Brakes 90
Front brake adjustment 90
Rear brake adjustment 90
3.2 Clutch 91
Adjusting the clutch lever position 91
Adjusting the clutch lever clearance 91
3.3 Throttle control 92
Adjusting the throttle grip clearance 92
3.4 Adjusting the engine idling speed 92
3.5 Handlebar adjustment 93
Handlebar installation and adjustment 93
3.6 Rear-view mirrors(for XEF 250 / XEF 450 versions only) 94
Rear-view mirror adjustment 94
3.7 Fork adjustment 95
Rebound damping adjustment (return) 95
Compression damping adjustment 95
Relieving the front fork internal pressure 96
3.8 Rear shock absorber adjustment 97
Rebound damping adjustment (return) 97
Compression damping adjustment (low speed) 97
Compression damping adjustment (high speed) 98
3.9 Setting the SAG 98
Rear shock absorber sinking adjustment (SAG) 98
3.10 Chain tension 100
Chain tension check 100
Chain tension adjustment 100
3.11 Engine mappings (XXF 250 / XXF 450 versions) 101
3.12 Traction CONTROL mode (XXF 250 / XXF 450 versions) 101
TRACTION CONTROL level setting 101
3.13 Launch CONTROL mode (XXF 250 / XXF 450 versions) 102
Activation of LAUNCH CONTROL 102
LAUNCH CONTROL operation 104

4. Maintenance 106

4.1 Engine oil 106
Engine oil level check(XXF 250 / XEF 250 versions) 106
Engine oil level check(XEF 450 version) 106
Engine oil level check(XXF 450 version) 106
Engine oil change and engine oil filter replacement 107
(XXF 250 / XEF 250 / XEF 450 versions) 107

Engine oil change and engine oil filter replacement 108
(XXF 450 version) 108
Engine oil filling (XXF 250 / XEF 250 versions) 109
Engine oil filling (XEF 450 version) 110
Engine oil filling (XXF 450 version) 110
4.2 Coolant 111
Checking the coolant level 111
Coolant replacement 112
4.3 Air filter 113
(XXF 250 / XEF 250 / XEF 450 versions) 113
4.3 Air filter 115
(XXF 450 version) 115
4.4 Camshafts 118
Removal (XXF 250 / XEF250 versions) 118
Installation (XXF 250 / XEF250 versions) 119
Removal (XXF 450 / XEF450 versions) 121
Installation (XXF 450 / XEF450 versions) 125
4.5 Valve clearance 129
Check 129
Adjustment 129
4.6 Cylinder head 131
Removal (XXF 250 / XEF 250 versions) 131
Check (XXF 250 / XEF 250 versions) 131
Installation (XXF 250 / XEF 250 versions) 131
Removal (XEF 450 version) 133
Removal (XXF 450 version) 133
Check (XXF 450 / XEF 450 versions) 134
Installation (XXF 450 / XEF 450 versions) 134
4.7 Cylinder and piston 136
Removal 136
Cylinder check 136
Piston check 137
Installation 137
4.8 Soundproofing 139
4.9 Clutch 140
Clutch removal (XXF 250 / XEF 250 / XEF 450 versions) 140
Clutch Removal (XXF450 version) 142
Check the clutch elements 146
Clutch installation (XXF 250 / XEF 250 / XEF 450 versions) 147
Clutch installation (XXF 450 version) 151
4.10 Steering play control and adjustment 155
Steering play control 155
Steering play adjustment 155
4.11 Fork 156
4.12 Shock absorber 156
4.13 Wheels 156
Spokes check and tightening 156
Wheel check 157

4.14 Brake pads 157
Replace the front brake pads 157
Replace the rear brake pads 158
4.15 Tyres 160
4.16 Chain, crown and sprocket 160
Chain check 160
Pinion and crown check 160
4.17 Cleaning and vehicle storage 161
4.18 Long time vehicle inactivity 161
5. Warranty and service 162
Introduction 162
Fantic 24-month commercial warranty 162
1. Warranty content 162
2. Effectiveness 163
3. Exclusions 163
4. Disputes 163
FANTIC 3-MONTH OFF-ROAD COMMERCIAL WARRANTY 163
5. Warranty content 163
6. Effectiveness 164
7. Exclusions 164
8. Disputes 164
Intervention request 164
Warranty data 166
Service 167

1.1 WARNINGS

Carbon monoxide

⚠ **The exhaust fumes contain carbon monoxide, a poisonous gas that can cause death. Therefore, for certain operations, make sure you are in an open space, or in a suitable and well-ventilated room, never in enclosed spaces. If operating in enclosed spaces, use an evacuation system for the exhaust fumes.**

Fuel

⚠ **The fuel used is extremely flammable and can become explosive under certain conditions. Refuelling and maintenance operations must be carried out in a ventilated area and with the vehicle switched off. Do not smoke during refuelling and near fuel vapours; avoid contact with open flames, sparks and any other source that could cause ignition or explosion.**

⚠ **Do not disperse in the environment and keep away from children.**

Hot components

⚠ **The engine and certain components become very hot and remain hot for a while even when the engine is off. Before carrying out any operation near the engine or exhaust system, wear insulating gloves or wait for their cooling.**

Used engine and gearbox oil

⚠ **Used engine and gearbox oil is harmful to health, whether it is inhaled or swallowed. It is also irritating and can cause serious consequences if it comes into contact with the skin.**

⚠ **Spreading and dispersion into the environment is prohibited.**

⚠ **If swallowed, do not induce vomiting, but go urgently to a first aid centre, indicating the cause and how the accident occurred.**

⚠ **In case of contact with the skin, immediately wash the affected part with soap and water, repeating the operation until the affected part is free from residues.**

⚠ **In case of contact with eyes and ears, immediately rinse the affected parts with plenty of water and urgently go to a first aid center, indicating the cause and how the accident occurred.**

⚠ **In case of contact with clothing, undress and wash thoroughly with soap and water. Change the dirty cloths which must be specifically washes as soon as possible.**

⚠ **Always use gloves suitable to protect your hands during the maintenance operations.**

⚠ **Keep out of the reach of children.**

ⓘ **Used engine and gearbox oil must be collected in a sealed container, and delivered to the nearest service station or at a waste oil collection centre where you will find personnel authorized to dispose of it.**

Brakes

⚠ **Brake fluid may damage the vehicle painted, plastic or rubber surfaces. Protect these components with a clean rag when performing certain operations.**

⚠ **Always wear protective glasses and in case of accidental contact of the brake fluid with eyes, rinse immediately with plenty of clean, fresh water and consult a doctor immediately. Keep out of the reach of children.**

⚠ **Clean the brake pads in a ventilated environment, directing the compressed air jet so as not to inhale the dust produced by the wear of the friction material. Although the latter does not contain asbestos, inhaling dust is however harmful.**

Electrolyte and hydrogen gas from the battery

⚠ **The electrolyte of the battery is toxic and caustic. In contact with skin it can cause burns, as it contains sulphuric acid. Wear gloves and protective clothing.**

⚠ **If the electrolyte liquid comes into contact with the skin, wash it thoroughly with fresh water.**

⚠ **Protect your eyes, as battery fluid can cause blindness. If it comes into contact with the eyes, wash thoroughly with water for fifteen minutes and promptly contact an eye specialist.**

The battery emits explosive gases, it is advisable to keep away flames, sparks and any other source of heat. Provide adequate ventilation when servicing or recharging the battery.

Keep out of the reach of children.

The battery fluid is corrosive. Do not pour it or spread it, especially on plastic parts.

Provide for regular disposal.

Coolant

Under certain conditions, the ethylene glycol present in the engine coolant is combustible and its flame is not visible. If ethylene glycol is ignited, its flame is not visible but it is able to cause serious burns.

Avoid pouring engine coolant to the exhaust system or on engine parts. These parts may be hot enough to ignite the liquid which then burns without visible flames. Coolant (ethylene glycol) can cause skin irritation and is poisonous if swallowed. Keep out of the reach of children. Do not remove the radiator cap when the engine is still hot. Coolant is under pressure and may cause burns.

Keep hands and clothes away from the cooling fan as it starts automatically.

Precautions and general warnings

The clothing of the operator performing the repair operations must be adequate to avoid the risk of injury when working on moving parts (for example, too wide clothes that can get caught).

Do not wear personal items (e.g. rings, wristwatches, etc.) while performing repairs on the vehicle, and in particular on the electrical system.

Keep the work area tidy, to avoid that elements left on the ground interfere with the repair operations.

Clean the floors of the working areas from oil, grease or other residual fluids, to avoid slipping.

Perform compression or decompression operations on the springs, using only suitable tools to prevent the operations from causing damage to the operator.

Avoid inhalation of vapours from cleaning fluids: they can be highly toxic. Make sure the work area is properly ventilated.

Use suitable cleaning products for each operation, making sure that they are approved.

Wear eye protection when using electrical tools such as drills, grinders or milling machines.

1.2 SYMBOLS USED IN THE MANUAL

Within this manual there will be technical warnings and annotations preceded by the following symbols according to the reference topic:

Warning regarding the procedure described and the specific safety rules: indicates procedures that must be followed to prevent damage to the vehicle or possible injuries to vehicle repairers.

Information note on the procedure described and on the characteristics of the vehicle: it provides useful information to make the procedure easier and clearer.

Tightening torque: note showing one or more tightening torques values referred to the procedure described.

Measurement data: note showing the values of one or more measurements to be complied with or verified for the procedure described.

Equipment: note that informs the user of the need to use particular tools for the procedure described.

Consumable: note that illustrates the names, types and/or quantities of consumables (such as oil, fuel, sealants, additives, etc.) to be used for the procedure described.

All left or right indications refer to the direction of travel of the motorcycle.

This manual contains images illustrating some disassembling sequences, using the following symbols to identify the characteristics of the type of intervention.

E **Apply and/or lubricate using engine oil.**

G **Apply and/or lubricate using gear oil.**

M **Apply and/or lubricate using molybdenum disulphide oil.**

BF **Apply and/or lubricate using brake fluid.**

Apply a product that is not specified or specified separately.

B **Apply wheel bearing grease.**

LS **Apply lithium soap based grease.**

M **Apply molybdenum disulphide grease.**

S **Apply and/or lubricate using silicone grease.**

LT **Apply a threadlocker (LOCTITE®).**

New **Replace with a new component.**

1.3 BEHAVIOUR AND DRIVING

Some safety tips are given below to avoid damage to people and/or things and to use your vehicle with an easier and safer drive.

Vehicle use

To use the vehicle it is necessary to meet all the law requirements.

It is advisable, in order to acquire a good knowledge of the vehicle, to use the vehicle in areas without traffic or unpopulated stretches of road.

It is advisable to always respect the highway code while driving, to avoid sudden or dangerous manoeuvres keeping both hands on the handlebar and always keeping your feet on the appropriate footrests. Pay close attention while riding.

⚠ **Do not ride the vehicle while drunk, under the influence of drugs, after taking certain medicines or in a state of physical fatigue and drowsiness. Failure to comply with these rules is considered extremely dangerous and could cause serious damage to property and/or people.**

Evaluate and keep in consideration the conditions of the road surface, visibility and weather. In a situation not suitable for safe driving, reduce the speed and drive carefully.

The braking effect in wet roads without ever having applied the brakes is initially less; under these conditions it is advised to periodically operate the brakes.

In case the vehicle is used on roads dirty with sand, mud, snow mixed with salt, we recommend checking and if necessary cleaning the brake discs with special non-aggressive detergents, so as to prevent the formation of abrasive agglomerates inside the holes and an early wear of the brake pads.

The getting on and off from the vehicle must be in complete freedom of movement and without impediments.

Go up and down only from the left side of the vehicle and with the kickstand down to prevent unbalancing or loss of balance, causing falls or overturns.

⚠ **The rider is always the first to go on and the last to go down as he/she has to govern the stability of the vehicle.**

Getting on

The passenger must make the movements to get on with the utmost caution, avoiding to unbalance the rider and the vehicle.

Place your feet on the ground and hold the vehicle in running position.

Getting off

Stop the vehicle in an area suitable for stopping or parking, ensuring that the ground is stable and free of obstacles. Fully extend the kickstand using the left foot.

Tilt the vehicle making the kickstand touch the ground. Get off the vehicle and turn the handlebar completely to the left.

⚠ **Make sure that the vehicle is stationary and stable.**

⚠ **Do not lift the vehicle grasping the license plate holder frame, in order to avoid damage.Qui di seguito vengono elencati alcuni consigli sulla sicurezza al fine di evitare danni a persone e/o cose e per utilizzare il proprio veicolo con una guida più tranquilla e sicura.**

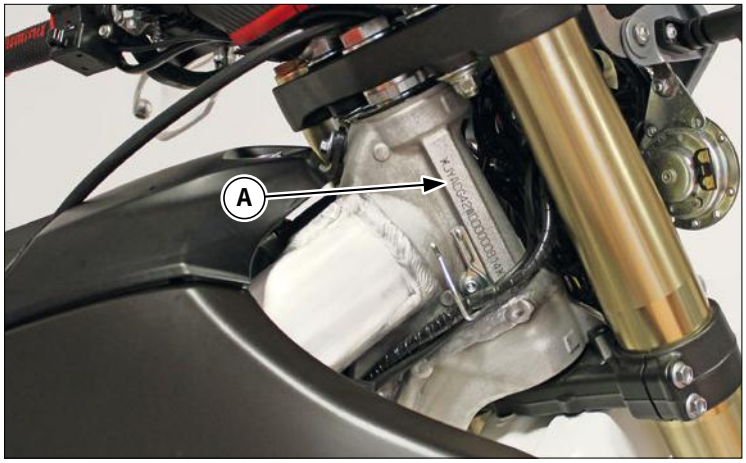

Fantic Motor vehicles are equipped with frame and engine identification numbers.

ⓘ **These numbers that identify the motorcycle model must be mentioned for the request for spare parts.**

1.4 FRAME NUMBER

The frame number “A” is punched on the steering tube on the right side.

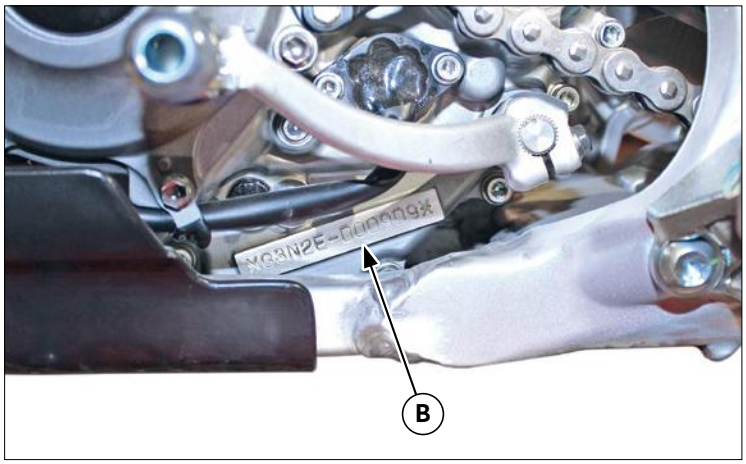

1.5 ENGINE NUMBER

XXF 250 / XEF 250 versions

The engine number “B” is punched on the left side of the engine crankcase.

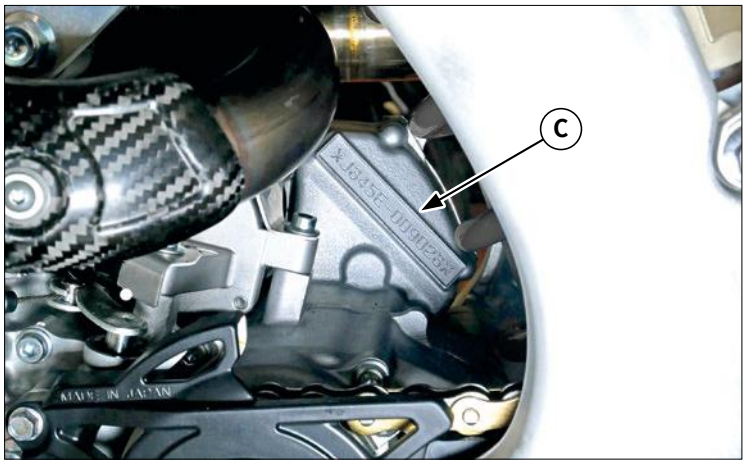

XEF 450 version

The engine number “C” is punched on the right-hand engine casing on the inside. It is visible when looking at the inside of the vehicle from the left side.

XXF 450 version

The engine number “C” is punched on the engine casing on the inside. It is visible when looking at the inside of the vehicle from the right side.

1.6 LOCATION OF IMPORTANT LABELS

1. Pressurised gas hazard label
2. Usable petrol quality label **(XEF 250 / XEF 450 ONLY)**
3. Chassis number punching
4. Vehicle data plate **(XXF 250 / XEF 250 / XEF 450 ONLY)**
5. Vehicle data label **(XXF 450 ONLY)**
6. “Choke” symbol **(XEF 250 / XEF 450 ONLY)**
7. Tyre pressure label **(XEF 250 / XEF 450 ONLY)**

1

2

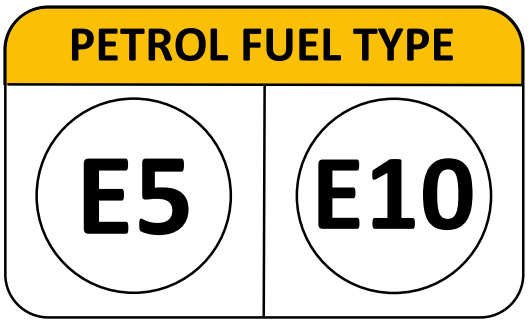

3

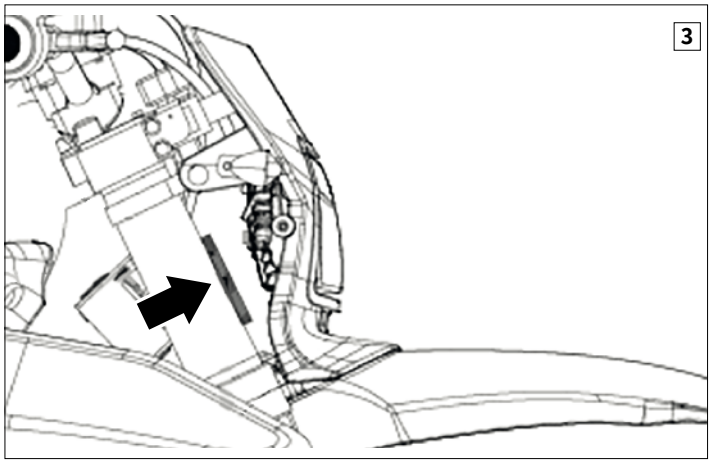

4

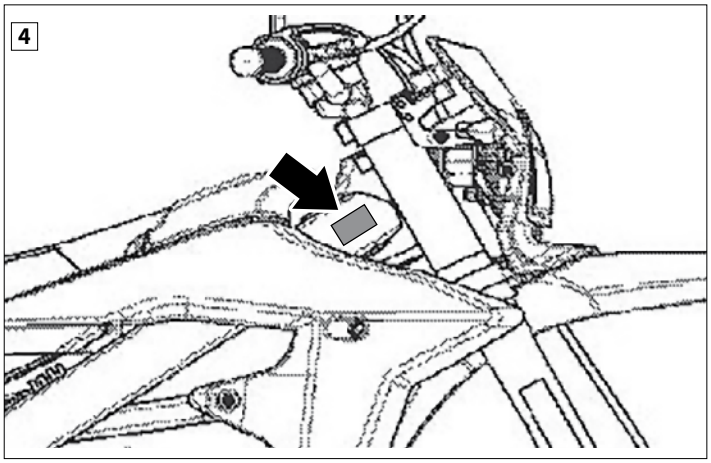

5

6

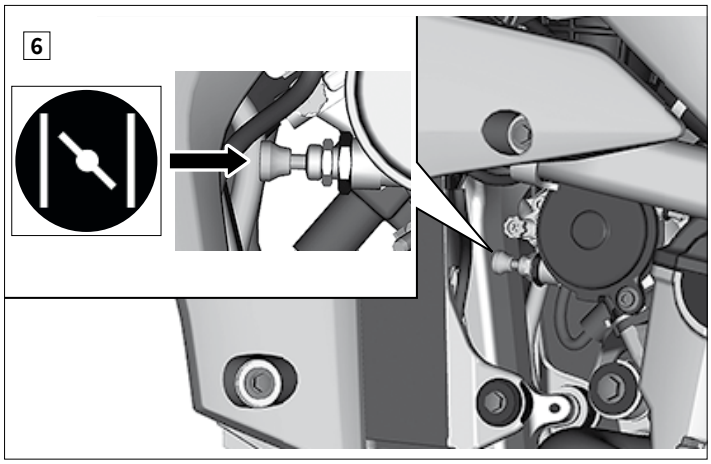

7

FANTIC		PRESSURE [kPa]	
AXLE	SIZE	ON-ROAD USE	OFF-ROAD USE
Front	90/90-21	200	100
	80/100-21	200	100
Rear	140/80-18	220	100
	130/90-19	220	100
	120/90-18	220	100

1.7 VEHICLE COMPONENT LOCATION

Handlebar components (XEF 250 version)

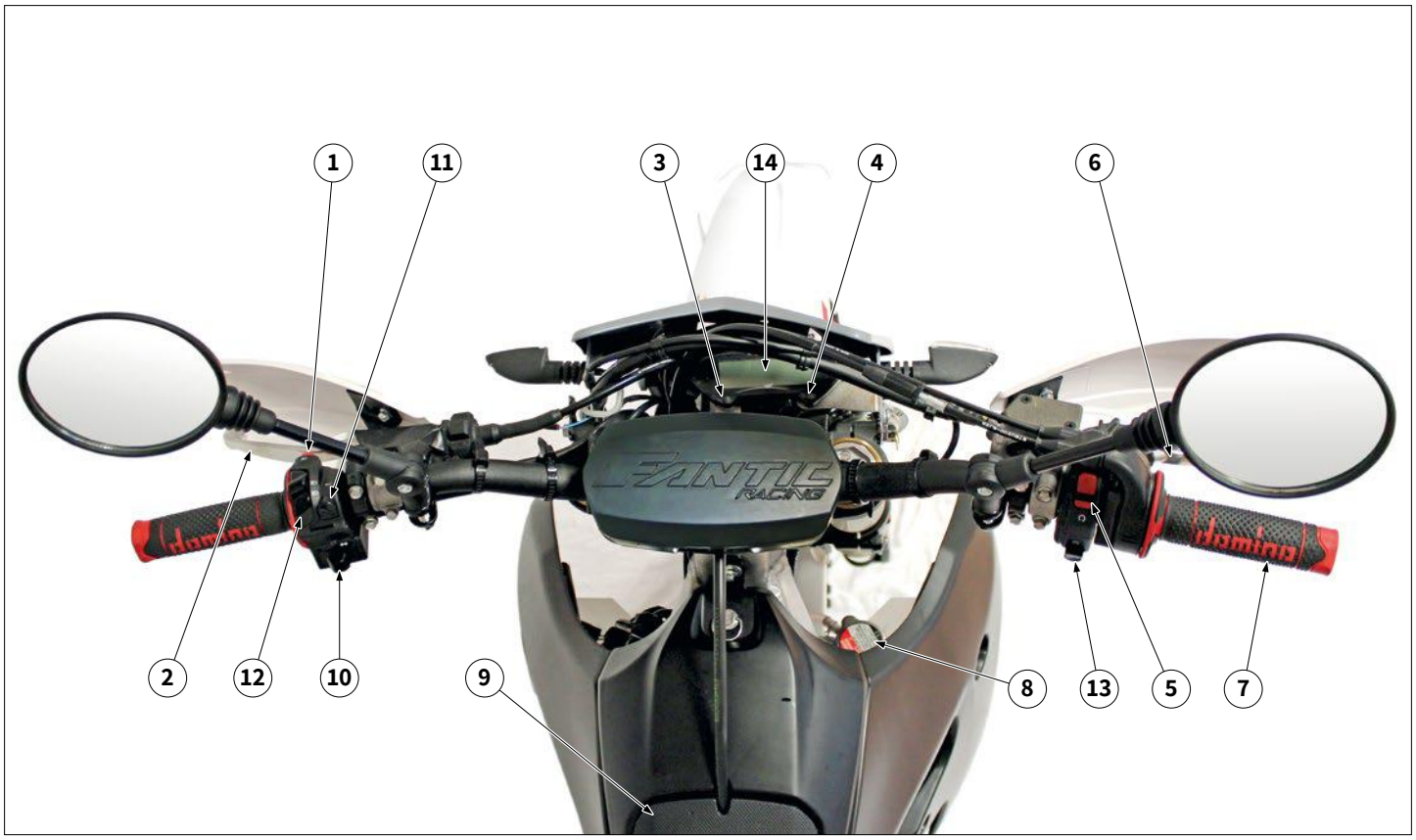

Ref.	Component
1	High beam flashing button
2	Clutch lever
3	“SELECT” button
4	“ADJUST” button
5	Engine stop switch
6	Front brake lever
7	Throttle grip
8	Radiator cap
9	Fuel tank cap
10	Speedlight switch
11	Horn button
12	Low beam/high beam light switch
13	Starter switch
14	Dashboard

Right and left side components (XEF 250 version)

Ref.	Component
15	Headlight
16	Radiator
17	Rear brake pedal
18	Inspection window for oil level check
19	Coolant drain bolt
20	Front fork
21	Fuel tank

Ref.	Component
22	Air filter
23	Taillight
24	Shift pedal
25	Drive chain
26	Oil filler cap
27	Starter knob

Handlebar components (XXF 250 version)

Ref.	Component
1	Clutch lever
2	Engine stop switch
3	Front brake lever
4	Throttle grip
5	Radiator cap
6	Starter switch
7	“Launch / traction control system” mode control button
8	Engine mapping selector

Right and left side components (XXF 250 version)

Ref.	Component
9	Fuel tank cap
10	“Launch / traction control system” display
11	Radiator
12	Rear brake pedal
13	Coolant drain bolt
14	Oil filler cap
15	Inspection window for oil level check

Ref.	Component
16	Front fork
17	Fuel tank
18	Air filter
19	Shift pedal
20	Drive chain
21	Starter knob

Handlebar components (XEF 450 version)

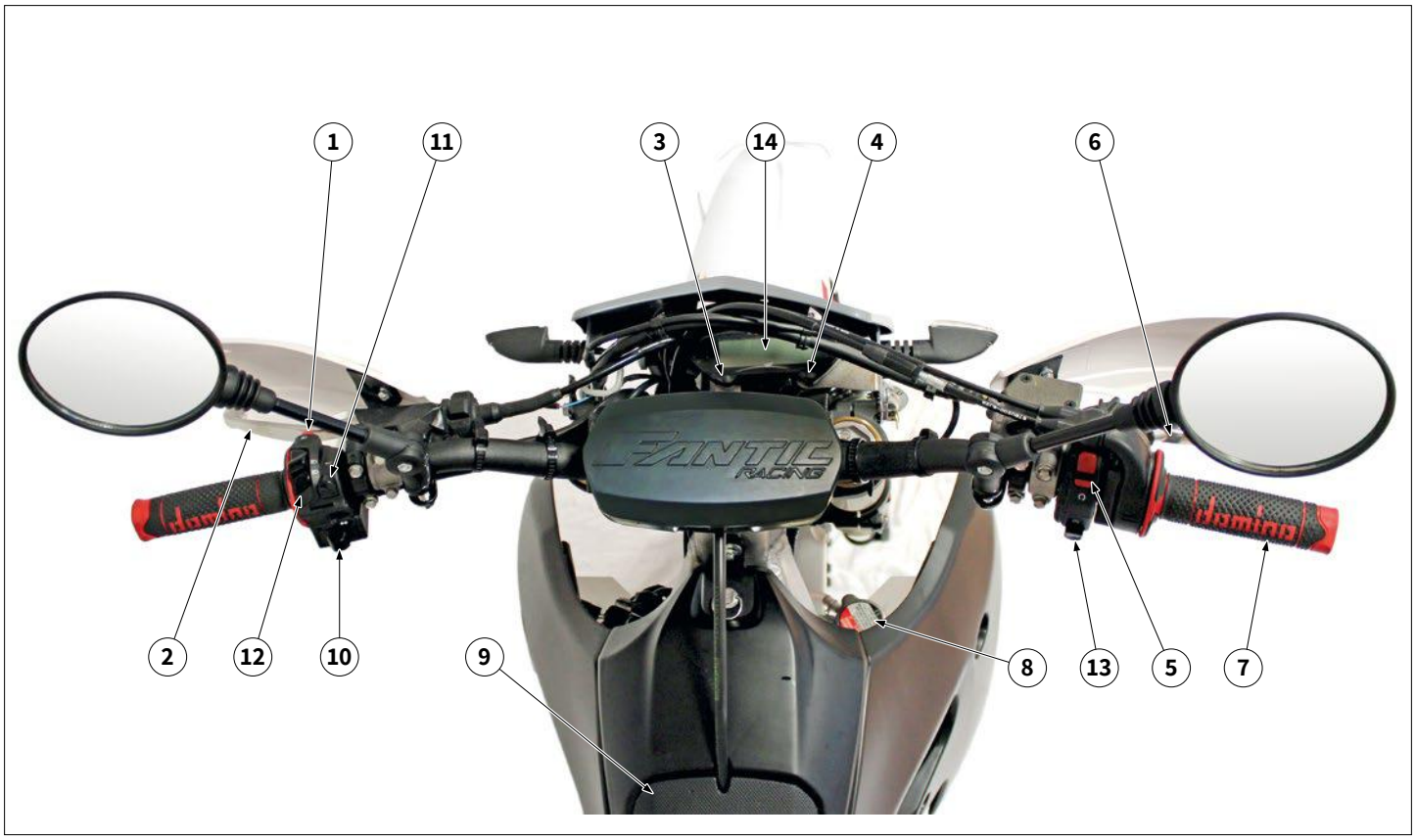

Ref.	Component
1	High beam flashing button
2	Clutch lever
3	“SELECT” button
4	“ADJUST” button
5	Engine stop switch
6	Front brake lever
7	Throttle grip
8	Radiator cap
9	Fuel tank cap
10	Speedlight switch
11	Horn button
12	Low beam/high beam light switch
13	Starter switch
14	Dashboard

Right and left side components (XEF 450 version)

Ref.	Component
15	Headlight
16	Radiator
17	Rear brake pedal
18	Coolant drain bolt
19	Inspection window for oil level check
20	Front fork
21	Fuel tank

Ref.	Component
22	Air filter
23	Taillight
24	Shift pedal
25	Drive chain
26	Oil filler cap
27	Starter knob

Handlebar components (XXF 450 version)

Ref.	Component
1	Clutch lever
2	Engine stop switch
3	Front brake lever
4	Throttle grip
5	Radiator cap
6	Starter switch
7	“Launch / traction control system” mode control button
8	Engine mapping selector

Right and left side components (XXF 450 version)

Ref.	Component
9	Fuel tank cap
10	“Launch / traction control system” display
11	Radiator
12	Rear brake pedal
13	Coolant drain bolt
14	Front fork
15	Fuel tank

Ref.	Component
16	Air filter
17	Oil filler cap
18	Inspection window for oil level check
19	Shift pedal
20	Drive chain
21	Starter knob

1.8 TECHNICAL DATA

Technical Data (versions XXF 250 / XEF 250)

All the values indicated for the XEF 250 version refer to the approved version.

Technical data	Value(s)
Overall length:	
XXF 250	2175 mm (85.6 in)
XEF 250	2175 mm (85.6 in)
Overall width:	
XXF 250	825 mm (32.5 in)
XEF 250	825 mm (32.5 in)
Overall height:	
XXF 250	1285 mm (50.6 in)
XEF 250	1270 mm (50.0 in)
Seat height:	
XXF 250	970 mm (38.2 in)
XEF 250	955 mm (37.6 in)
Wheelbase:	
XXF 250	1475 mm (58.1 in)
XEF 250	1480 mm (58.3 in)
Minimum ground clearance:	
XXF 250	335 mm (13.19 in)
XEF 250	320 mm (12.60 in)
Weight in running order:	
XXF 250	105 kg (231 lb)
XEF 250	115 kg (254 lb)
Weight at full load:	
XXF 250	175 kg (385.8 lb)
XEF 250	185 kg (407.8 lb)
Maximum allowable weight:	
XXF 250	250 kg (551.2 lb)
XEF 250	250 kg (551.2 lb)
Engine type	Liquid cooled, 4-stroke, gasoline
Cylinder arrangement	Single cylinder
Displacement	250 cm^3
Bore × stroke	77.0 x 53.6 mm (3.03 x 2.11 in)
Compression ratio:	13.8 : 1
Valve train	DOHC
Starting system	Electric starter
Lubrication system	Wet sump
Olio per trasmissioni:	
Tipo raccomandato	10W-40, 10W-50, 15W-40, 20W-40, 20W-50 API service SG type or higher, JASO standard Ma
Cambio dell'olio	0.73 L (0.64 Imp qt, 0.73 US qt)
Con rimozione dell'elemento filtro olio	0.75 L (0.66 Imp qt, 0.75 US qt)
Quantità totale	0.95 L (0.84 Imp qt, 1.00 US qt)
Oil filter:	
Oil filter type	Cartridge

Technical data	Value(s)
Cooling system:	
Coolant quantity (including all routes)	0.93 L (0.82 Imp qt, 0.98 US qt)
Radiator cap valve opening pressure	107.9–137.3 kPa (1.08–1.37 kgf/cm^2, 15.6–19.9 psi))
Air filter oil	Air Filter Special Oil
Brake oil	Synthetic Brake Fluid DOT 4
Air filter	Wet element
Fuel:	
Type	Premium unleaded gasoline only (E10 acceptable)
Tank capacity:	
XXF 250	6.2 L (1.6 US gal, 1.4 Imp.gal)
XEF 250	7.9 L (1.70 Imp gal, 2.10 US gal)
Reserve amount (XEF 250 version only)	2.0 L (0.44 Imp gal, 0.53 US gal)
Fuel pump:	
Pump type	Electrical
Maximum consumption amperage	2.4 A
Fuel injector (resistance)	12.0 Ω
Throttle body:	
XXF 250	B7B1
XEF 250	BAK1
Spark plug:	
Type/Manufacturer	NGK/LMAR8E-J
Gap	0.6–0.7 mm (0.024–0.028 in)
Clutch type	Wet, multiple-disc
Primary reduction system	Gear
Primary reduction ratio	3.353 (57/17)
Final drive	Chain
Secondary reduction ratio:	
XXF 250	3.846 (50/13)
XEF 250	3.923 (51/13)
Transmission type:	
XXF 250	Constant mesh, 5-speed
XEF 250	Constant mesh, 6-speed
Operation	Left foot operation
Gear ratio (XXF 250 version):	
1a	2.143 (30/14)
2a	1.750 (28/16)
3a	1.444 (26/18)
4a	1.222 (22/18)
5a	1.042 (25/24)
Gear ratio (XEF 250 version):	
1a	2.385 (31/13)
2a	1.813 (29/16)
3a	1.444 (26/18)
4a	1.143 (24/21)
5a	0.957 (22/23)
6a	0.815 (22/27)
Seats	1
Frame	Perimeter

Technical data	Value(s)
Caster angle:	
XXF 250	26.8°
XEF 250	27.2°
Trail:	
XXF 250	119 mm (4.7 in)
XEF 250	116 mm (4.6 in)
Wheels (XXF 250):	
Front	80/100-21
Rear	100/90-19
Front/rear inflation pressure	1 bar (100 kPa - 15 PSI)
Wheels (XEF 250) (original equipment):	
Front	90/90-21
Rear	140/80-18
Front inflation pressure (road use)	2 bar (200 kPa - 29 PSI)
Rear inflation pressure (road use)	2,2 bar (220 kPa - 32 PSI)
Front/rear inflation pressure (“Racing” use)	1 bar (100 kPa - 15 PSI)
Wheels (XEF 250) (alternative sizes):	
Front	80/100-21
Rear	130/90-18, 120/90-18
Front inflation pressure (road use)	2 bar (200 kPa - 29 PSI)
Rear inflation pressure (road use)	2,2 bar (220 kPa - 32 PSI)
Front/rear inflation pressure (“Racing” use)	1 bar (100 kPa - 15 PSI)
Brake:	
Front brake type	Hydraulic single disc brake
Operation	Right hand operation
Rear brake type	Hydraulic single disc brake
Operation	Right foot operation
Suspension:	
Front suspension	Telescopic fork
Rear suspension	Swingarm (link suspension)
Shock absorber:	
Front shock absorber	Coil spring/hydraulic damper
Rear shock absorber	Coil spring/gas-hydraulic damper
Wheel travel:	
Front wheel travel	310 mm (12.2 in)
Rear wheel travel	317 mm (12.5 in)
Ignition system	TCI
Turn signals (XEF 250 version)	12 V – 6 W
High/low beam light (XEF 250 version)	Led
Position/brake light (XEF 250 version)	Led
License plate light (XEF 250 version)	Led
Fuses:	
Battery fuse	15.0 A
Electrical wiring fuse (XEF 250 version)	5.0 A

Technical Data (versions XXF 450 / XEF 450)

All the values indicated for the XEF 450 version refer to the approved version.

Dato tecnico	Valore/i
Overall length: XXF 450 XEF 450	 2180 mm (85.8 in) 2175 mm (85.6 in)
Overall width: XXF 450 XEF 450	 825 mm (32.5 in) 825 mm (32.5 in)
Overall height: XXF 450 XEF 450	 1275 mm (50.2 in) 1270 mm (50.0 in)
Seat height: XXF 450 XEF 450	 965 mm (38.0 in) 955 mm (37.6 in)
Wheelbase: XXF 450 XEF 450	 1480 mm (58.3 in) 1480 mm (58.3 in)
Minimum ground clearance: XXF 450 XEF 450	 350 mm (13.78 in) 320 mm (12.60 in)
Weight in running order: XXF 450 XEF 450	 108 kg (238.0 lb) 119 kg (262.3 lb)
Weight at full load: XXF 450 XEF 450	 178 kg (392.6 lb) 189 kg (416.6 lb)
Maximum allowable height: XXF 450 XEF 450	 250 kg (551.2 lb) 250 kg (551.2 lb)
Engine type	Liquid cooled, 4-stroke, gasoline
Cylinder arrangement	Single cylinder
Displacement	450 cm^3
Bore × stroke	97.0 x 60.8 mm (3.82 x 2.39 in)
Compression ratio:	13.0 : 1
Valve train	DOHC
Starting system	Electric starter
Lubrication system: XXF 450 XEF 450	 Dry sump Wet sump
Transmission oil: Recommended type Periodic oil change With oil filter removal Total amount	 10W-40, 10W-50, 15W-40, 20W-40, 20W-50 API service tipo SG o superiore, JASO standard MA 0.94 L (0.99 US qt, 0.83 Imp.qt) 0.96 L (1.01 US qt, 0.84 Imp.qt) 1.20 L (1.27 US qt, 1.06 Imp.qt)
Oil filter: Oil filter type	 Cartridge

Dato tecnico	Valore/i
Cooling system:	
Coolant quantity (including all routes)	1.03 L (1.09 US qt, 0.91 Imp.qt)
Radiator cap valve opening pressure	107.9–137.3 kPa (1.08–1.37 kgf/cm^2, 15.6–19.9 psi))
Air filter oil	Air Filter Special Oil
Brake oil	Synthetic Brake Fluid DOT 4
Air filter	Wet element
Fuel:	
Type	Premium unleaded gasoline only (E10 accettable)
Tank capacity:	
XXF 450	6.2 L (1.6 US gal, 1.4 Imp.gal)
XEF 450	7.9 L (1.70 Imp gal, 2.10 US gal)
Reserve amount (XEF 450 version)	2.0 L (0.44 Imp gal, 0.53 US gal)
Fuel pump:	
Pump type	Electrical
Maximum consumption amperage	2.4 A
Fuel injector (resistance)	12.0 Ω
Throttle body:	
XXF 450	BHR1
XEF 450	B7R1
Spark plug:	
Type/Manufacturer	NGK/LMAR8G
Gap	0.7–0.8 mm (0.028–0.031 in)
Clutch type	Wet, multiple-disc
Primary reduction system	Gear
Primary reduction ratio:	
XXF 450	2.481 (67/27)
XEF 450	2.609 (60/23)
Final drive	Chain
Secondary reduction ratio:	
XXF 450	3.769 (49/13)
XEF 450	3.692 (48/13)
Transmission type	Constant mesh, 5-speed
Operation	Left foot operation
Gear ratio (XXF 450 version):	
1a	2.000 (28/14)
2a	1.625 (26/16)
3a	1.350 (27/20)
4a	1.136 (25/22)
5a	1.000 (21/21)
Gear ratio (XEF 450 version):	
1a	2.417 (29/12)
2a	1.733 (26/15)
3a	1.313 (21/16)
4a	1.050 (21/20)
5a	0.840 (21/25)
Seats	1
Frame	Perimeter

Dato tecnico	Valore/i
Caster angle:	
XXF 450	26.9°
XEF 450	27.2°
Trail:	
XXF 450	120 mm (4.7 in)
XEF 450	116 mm (4.6 in)
Wheels (XXF 450):	
Front	80/100-21
Rear	110/90-19
Front/rear inflation pressure	1 bar (100 kPa - 15 PSI)
Wheels (XEF 450) (original equipment):	
Front	90/90-21
Rear	140/80-18
Front inflation pressure (road use)	2 bar (200 kPa - 29 PSI)
Rear inflation pressure (road use)	2,2 bar (220 kPa - 32 PSI)
Front/rear inflation pressure (“Racing” use)	1 bar (100 kPa - 15 PSI)
Wheels (XEF 450) (alternative sizes):	
Front	80/100-21
Rear	130/90-18, 120/90-18
Front inflation pressure (road use)	2 bar (200 kPa - 29 PSI)
Rear inflation pressure (road use)	2,2 bar (220 kPa - 32 PSI)
Front/rear inflation pressure (“Racing” use)	1 bar (100 kPa - 15 PSI)
Brake:	
Front brake type	Hydraulic single disc brake
Operation	Right hand operation
Rear brake type	Hydraulic single disc brake
Operation	Right foot operation
Suspension:	
Front suspension	Telescopic fork
Rear suspension	Swingarm (link suspension)
Shock absorber:	
Front shock absorber	Coil spring/hydraulic damper
Rear shock absorber	Coil spring/gas-hydraulic damper
Wheel travel:	
Front wheel travel	310 mm (12.2 in)
Rear wheel travel (XEF 450)	317 mm (12.5 in)
Rear wheel travel (XXF 450)	315 mm (12.4 in)
Ignition system	TCI
Turn signals (XEF 450 version only)	12 V – 6 W
High/low beam light (XEF 450 version only)	Led
Position/brake light (XEF 450 version only)	Led
License plate light (XEF 450 version only)	Led
Fuses:	
Battery fuse	15.0 A
Electrical wiring fuse (XEF 450 version only)	5.0 A

1.9 TIGHTENING TORQUES

Engine tightening torques (XEF 250 / XEF 450 versions)

ⓘ **"◊" = marked portion shall be checked for torque tightening after break-in or before each race.**

Item	Thread size	Quantity	Tightening torque	Remarks
Camshaft cap bolt	M6	8	10 Nm (1.0 kgf•m, 7.4 lb•ft)	E
Spark plug	M10	1	13 Nm (1.3 kgf•m, 9.6 lb•ft)	
Cylinder head stud bolt (exhaust pipe)	M6	2	7 Nm (0.7 kgf•m, 5.2 lb•ft)	
Oil passage plug (cylinder head)	M6	1	10 Nm (1.0 kgf•m, 7.4 lb•ft)	
Cylinder head bolt	M9	4	See tip ❶ at page 31.	M
Cylinder head nut	M6	2	10 Nm (1.0 kgf•m, 7.4 lb•ft)	
Cylinder head cover bolt	M6	2	10 Nm (1.0 kgf•m, 7.4 lb•ft)	
Cylinder bolt	M6	1	10 Nm (1.0 kgf•m, 7.4 lb•ft)	
Oil pressure check bolt	M6	1	10 Nm (1.0 kgf•m, 7.4 lb•ft)	
Balancer weight plate screw	M6	2	10 Nm (1.0 kgf•m, 7.4 lb•ft)	LT
Balancer weight gear nut	M14	1	50 Nm (5.0 kgf•m, 37 lb•ft)	
Balancer nut	M10	1	38 Nm (3.8 kgf•m, 28 lb•ft)	
Timing chain guide stopper plate (exhaust side)	M6	1	10 Nm (1.0 kgf•m, 7.4 lb•ft)	LT
Timing chain tensioner cap bolt	M6	1	6 Nm (0.6 kgf•m, 4.4 lb•ft)	
Timing chain tensioner bolt	M6	2	10 Nm (1.0 kgf•m, 7.4 lb•ft)	
Coolant drain bolt	M6	1	10 Nm (1.0 kgf•m, 7.4 lb•ft)	
Radiator hose clamp screw	M6	8	1.5 Nm (0.15 kgf•m, 1.1 lb•ft)	
Radiator bolt	M6	4	10 Nm (1.0 kgf•m, 7.4 lb•ft)	
Radiator pipe joint bolt	M6	1	10 Nm (1.0 kgf•m, 7.4 lb•ft)	
Radiator fan bolt	M6	3	8 Nm (0.8 kgf•m, 5.9 lb•ft)	
Water pump housing cover bolt	M6	4	10 Nm (1.0 kgf•m, 7.4 lb•ft)	
Water pump impeller	M8	1	14 Nm (1.4 kgf•m, 10 lb•ft)	
Oil pump bolt	M5	2	5 Nm (0.5 kgf•m, 3.7 lb•ft)	LT
Oil pump cover screw	M4	1	2.0 Nm (0.20 kgf•m, 1.5 lb•ft)	
Oil strainer bolt	M6	1	10 Nm (1.0 kgf•m, 7.4 lb•ft)	
Throttle cable cover bolt	M5	1	3.5 Nm (0.35 kgf•m, 2.6 lb•ft)	
Throttle body joint bolt	M6	2	10 Nm (1.0 kgf•m, 7.4 lb•ft)	
Throttle body joint clamp screw	M5	1	3.0 Nm (0.30 kgf•m, 2.2 lb•ft)	
Air filter case joint clamp screw	M5	1	3.0 Nm (0.30 kgf•m, 2.2 lb•ft)	
Air filter case bolt	M6	3	7 Nm (0.7 kgf•m, 5.2 lb•ft)	
Clutch cable locknut (clutch cable adjuster)	M6	1	4.3 Nm (0.43 kgf•m, 3.2 lb•ft)	
Clutch cable locknut (engine side)	M8	1	7 Nm (0.7 kgf•m, 5.2 lb•ft)	
Exhaust pipe nut	M6	2	10 Nm (1.0 kgf•m, 7.4 lb•ft)	
Exhaust pipe protector screw	M6	2	10 Nm (1.0 kgf•m, 7.4 lb•ft)	LT
Exhaust pipe bracket bolt	M8	1	20 Nm (2.0 kgf•m, 15 lb•ft)	
Silencer bolt (front)	M8	1	30 Nm (3.0 kgf•m, 22 lb•ft)	
Silencer bolt (rear)	M8	1	30 Nm (3.0 kgf•m, 22 lb•ft)	
Exhaust pipe clamp bolt	M8	2	12 Nm (1.2 kgf•m, 8.9 lb•ft)	
Spark arrester bolt	M5	4	9 Nm (0.9 kgf•m, 6.6 lb•ft)	
Silencer cap screw	M5	6	5 Nm (0.5 kgf•m, 3.7 lb•ft)	

Item	Thread size	Quantity	Tightening torque	Remarks
Oil nozzle bolt	M5	1	5 Nm (0.5 kgf•m, 3.7 lb•ft)	
Engine oil drain bolt	M10	1	20 Nm (2.0 kgf•m, 15 lb•ft)	
Crankcase bolt	M6	12	12 Nm (1.2 kgf•m, 8.9 lb•ft)	
Clutch cable holder bolt	M6	2	10 Nm (1.0 kgf•m, 7.4 lb•ft)	
Crankshaft end accessing screw	M36	1	10 Nm (1.0 kgf•m, 7.4 lb•ft)	
Timing mark accessing screw	M14	1	6 Nm (0.6 kgf•m, 4.4 lb•ft)	
Drive sprocket cover bolt	M6	2	7 Nm (0.7 kgf•m, 5.2 lb•ft)	
Crankcase bearing cover plate screw	M8	4	22 Nm (2.2 kgf•m, 16 lb•ft)	
Bearing plate cover bolt (left side of the drive axle)	M6	2	12 Nm (1.2 kgf•m, 8.9 lb•ft)	
Plate bolt	M6	4	12 Nm (1.2 kgf•m, 8.9 lb•ft)	
Clutch cover bolt	M6	6	10 Nm (1.0 kgf•m, 7.4 lb•ft)	
Crankcase cover bolt (left)	M6	7	10 Nm (1.0 kgf•m, 7.4 lb•ft)	
Crankcase cover bolt (right)	M6	9	10 Nm (1.0 kgf•m, 7.4 lb•ft)	
Oil filter element cover bolt	M6	2	10 Nm (1.0 kgf•m, 7.4 lb•ft)	
Starter clutch screw	M6	8	12 Nm (1.2 kgf•m, 8.9 lb•ft)	
Primary drive gear nut	M16	1	105 Nm (10.5 kgf•m, 77 lb•ft)	
Clutch spring bolt	M6	6	10 Nm (1.0 kgf•m, 7.4 lb•ft)	
Clutch boss nut	M20	1	95 Nm (9.5 kgf•m, 70 lb•ft)	Stake.
Drive sprocket nut	M18	1	75 Nm (7.5 kgf•m, 55 lb•ft)	Use a lock washer.
Segment	M8	1	30 Nm (3.0 kgf•m, 22 lb•ft)	
Shift guide bolt	M6	2	10 Nm (1.0 kgf•m, 7.4 lb•ft)	
Stopper lever bolt	M6	1	10 Nm (1.0 kgf•m, 7.4 lb•ft)	
Shift pedal bolt ◊	M6	1	12 Nm (1.2 kgf•m, 8.9 lb•ft)	
Generator rotor nut	M12	1	65 Nm (6.5 kgf•m, 48 lb•ft)	
Stator coil screw	M5	3	10 Nm (1.0 kgf•m, 7.4 lb•ft)	
Crankshaft position sensor bolt	M6	2	10 Nm (1.0 kgf•m, 7.4 lb•ft)	
Stator coil assembly lead holder bolt	M5	1	8 Nm (0.8 kgf•m, 5.9 lb•ft)	
Coolant temperature sensor	M10	1	14 Nm (1.4 kgf•m, 10 lb•ft)	
Gear position switch bolt	M5	2	3.5 Nm (0.35 kgf•m, 2.6 lb•ft)	
Rectifier/regulator bolt	M6	2	7 Nm (0.7 kgf•m, 5.2 lb•ft)	
ECU bolt	M5	2	3.8 Nm (0.38 kgf•m, 2.8 lb•ft)	
Ignition coil bolt	M6	2	7 Nm (0.7 kgf•m, 5.2 lb•ft)	
Starter motor bolt	M6	2	10 Nm (1.0 kgf•m, 7.4 lb•ft)	
Nut (holder)	M6	1	8 Nm (0.8 kgf•m, 5.9 lb•ft)	
Throttle position sensor screw	M5	1	3.5 Nm (0.35 kgf•m, 2.6 lb•ft)	
Intake air pressure sensor screw	M6	1	3.5 Nm (0.35 kgf•m, 2.6 lb•ft)	

Tip ❶: Cylinder head bolt (XEF 250 version)
- Tighten all the cylinder head tightening bolts evenly in the tightening order to **30 Nm (3.0 kgf•m, 22 lb•ft)**.
- Remove the one bolt according to the tightening order. When doing so, do not remove the other bolts.
- Retighten the bolt to 15 Nm (**1.5 kgf•m, 11 lb•ft**), and then tighten it further to reach the specified angle (60°).
- Remove the remaining bolts one by one in the same manner and retighten them.
- Finally, tighten all the bolts to reach the specified angle (60°).

Total tightening angle: 60° + 60° = 120°.

The first and second time, be sure to apply molybdenum disulfide oil to the bolt threads and seats as well as to both sides of the lock washers.

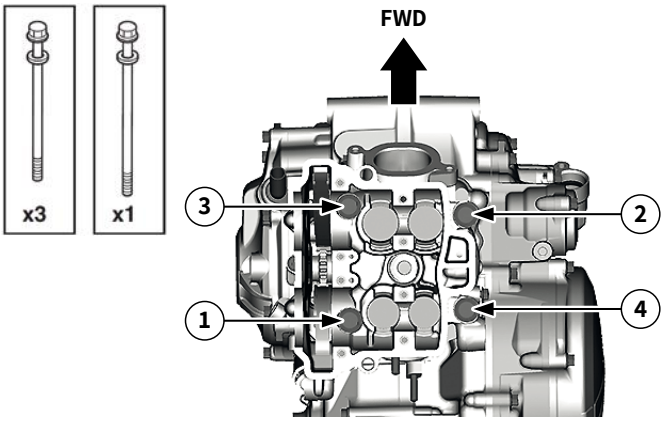

Tip ❶: Cylinder head bolt (XEF 450 version)
- First, tighten the cylinder head bolts to **40 N·m (4.0 kgf·m, 30 lb·ft)** in the proper tightening sequence and remove them.
- Retighten the cylinder head bolts to **23 N·m (2.3 kgf·m, 17 lb·ft)** in the proper tightening sequence.
- Tighten all bolts to reach the specified angle (90°) in a diagonal sequence.
- Then tighten the cylinder head bolts further to reach the specified angle (60°) in the proper tightening sequence.

The first and second time, be sure to apply molybdenum disulfide grease to the bolt threads and seats as well as to both sides of the washers.

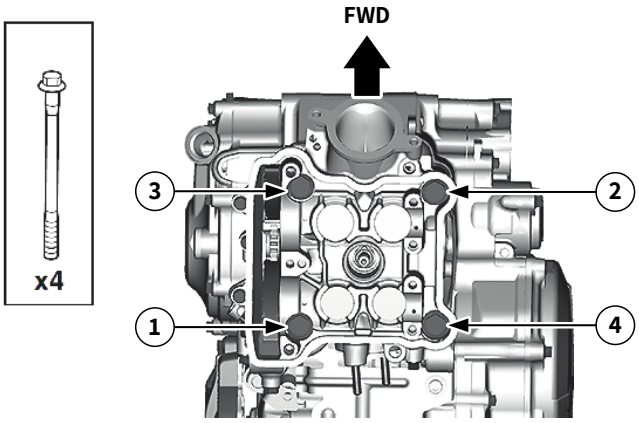

Chassis tightening torques (XEF 250 / XEF 450 versions)

ⓘ **"◊" = marked portion shall be checked for torque tightening after break-in or before each race.**

Item	Thread size	Quantity	Tightening torque	Remarks
Upper bracket pinch bolt ◊	M8	4	21 Nm (2.1 kgf•m, 15 lb•ft)	
Lower bracket pinch bolt ◊	M8	4	21 Nm (2.1 kgf•m, 15 lb•ft)	
Steering stem nut ◊	M24	1	145 Nm (14.5 kgf•m, 107 lb•ft)	
Upper handlebar holder bolt ◊	M8	4	28 Nm (2.8 kgf•m, 21 lb•ft)	
Lower handlebar holder nut ◊	M10	2	40 Nm (4.0 kgf•m, 30 lb•ft)	
Engine stop switch screw	M3	1	0.5 Nm (0.05 kgf•m, 0.37 lb•ft)	
Start switch	M3	1	0.5 Nm (0.05 kgf•m, 0.37 lb•ft)	
Mode switch (Except for Canada)	M3	1	1.3 Nm (0.13 kgf•m, 0.95 lb•ft)	
Lower ring nut ◊	M28	1	See tip ❷ at page 34.	
Damper assembly (front fork)	M51	2	30 Nm (3.0 kgf•m, 22 lb•ft)	
Inner tube and Adjuster	M22	2	55 Nm (5.5 kgf•m, 41 lb•ft)	LT
Base valve (front fork)	M42	2	28 Nm (2.8 kgf•m, 21 lb•ft)	
Adjuster (damper assembly)	M12	2	29 Nm (2.9 kgf•m, 21 lb•ft)	
Bleed screw (front fork)	M5	2	1.3 Nm (0.13 kgf•m, 0.95 lb•ft)	
Front fork protector bolt ◊	M6	6	5 Nm (0.5 kgf•m, 3.7 lb•ft)	
Speed sensor bolt	M6	1	7 Nm (0.7 kgf•m, 5.2 lb•ft)	
Plate bolt ◊	M5	2	3.8 Nm (0.38 kgf•m, 2.8 lb•ft)	
Throttle grip cap screw	M5	2	3.8 Nm (0.38 kgf•m, 2.8 lb•ft)	
Clutch lever holder bolt	M5	2	3.8 Nm (0.38 kgf•m, 2.8 lb•ft)	
Clutch lever nut	M6	1	4.0 Nm (0.40 kgf•m, 3.0 lb•ft)	
Front brake master cylinder holder bolt ◊	M6	2	9 Nm (0.9 kgf•m, 6.6 lb•ft)	
Front brake master cylinder reservoir cap screw	M4	2	1.5 Nm (0.15 kgf•m, 1.1 lb•ft)	
Front brake lever pivot bolt	M6	1	6 Nm (0.6 kgf•m, 4.4 lb•ft)	
Front brake lever pivot nut	M6	1	6 Nm (0.6 kgf•m, 4.4 lb•ft)	
Locknut (front brake lever position)	M6	1	5 Nm (0.5 kgf•m, 3.7 lb•ft)	
Front brake hose union bolt ◊	M10	2	30 Nm (3.0 kgf•m, 22 lb•ft)	
Front brake caliper bolt ◊	M8	2	28 Nm (2.8 kgf•m, 21 lb•ft)	
Front brake pad pin	M10	1	17 Nm (1.7 kgf•m, 13 lb•ft)	
Front brake pad pin plug	M10	1	2.5 Nm (0.25 kgf•m, 1.8 lb•ft)	
Front brake caliper bleed screw ◊	M8	1	6 Nm (0.6 kgf•m, 4.4 lb•ft)	
Front wheel axle nut ◊	M18	1	115 Nm (11.5 kgf•m, 85 lb•ft)	
Front wheel axle pinch bolt ◊	M8	4	21 Nm (2.1 kgf•m, 15 lb•ft)	
Front brake disc bolt ◊	M6	6	12 Nm (1.2 kgf•m, 8.9 lb•ft)	LT
Rear brake disc bolt ◊	M6	6	12 Nm (1.2 kgf•m, 8.9 lb•ft)	LT
Footrest bracket bolt	M10	4	55 Nm (5.5 kgf•m, 41 lb•ft)	LT
Sidestand bolt	M10	1	35 Nm (3.5 kgf•m, 26 lb•ft)	LT
Rear brake pedal bolt ◊	M8	1	26 Nm (2.6 kgf•m, 19 lb•ft)	
Rear brake pedal adjusting locknut	M6	1	6 Nm (0.6 kgf•m, 4.4 lb•ft)	
Rear brake master cylinder bolt ◊	M6	2	10 Nm (1.0 kgf•m, 7.4 lb•ft)	
Rear brake master cylinder reservoir cap bolt	M4	2	1.5 Nm (0.15 kgf•m, 1.1 lb•ft)	
Rear brake hose union bolt ◊	M10	2	30 Nm (3.0 kgf•m, 22 lb•ft)	
Rear brake caliper bleed screw ◊	M8	1	6 Nm (0.6 kgf•m, 4.4 lb•ft)	

Item	Thread size	Quantity	Tightening torque	Remarks
Rear brake pad pin	M10	1	17 Nm (1.7 kgf•m, 13 lb•ft)	
Rear brake pad pin plug	M10	1	2.5 Nm (0.25 kgf•m, 1.8 lb•ft)	
Rear wheel axle nut ◊	M20	1	125 Nm (12.5 kgf•m, 92 lb•ft)	
Drive chain puller locknut	M8	2	21 Nm (2.1 kgf•m, 15 lb•ft)	
Rear wheel sprocket nut ◊	M8	6	50 Nm (5.0 kgf•m, 37 lb•ft)	
Nipple (spoke) ◊	—	72	2.5 Nm (0.25 kgf•m, 1.8 lb•ft)	
Bolt (rear brake disc cover) ◊	M6	2	10 Nm (1.0 kgf•m, 7.4 lb•ft)	
Rear brake caliper protector bolt ◊	M6	2	7 Nm (0.7 kgf•m, 5.2 lb•ft)	
Engine mounting bolt (upper side) ◊	M10	2	45 Nm (4.5 kgf•m, 33 lb•ft)	
Engine mounting bolt (front side) ◊	M10	1	55 Nm (5.5 kgf•m, 41 lb•ft)	
Engine mounting bolt (lower side) ◊	M10	1	53 Nm (5.3 kgf•m, 39 lb•ft)	
Engine bracket bolt (upper side) ◊	M8	4	34 Nm (3.4 kgf•m, 25 lb•ft)	
Engine bracket bolt (front side) ◊	M8	4	34 Nm (3.4 kgf•m, 25 lb•ft)	
Rear frame bolt ◊	M8	4	38 Nm (3.8 kgf•m, 28 lb•ft)	
Engine guard bolt ◊	M6	3	7 Nm (0.7 kgf•m, 5.2 lb•ft)	
Pivot shaft nut ◊	M16	1	85 Nm (8.5 kgf•m, 63 lb•ft)	
Rear shock absorber assembly upper nut ◊	M10	1	56 Nm (5.6 kgf•m, 41 lb•ft)	
Rear shock absorber assembly lower nut ◊	M10	1	53 Nm (5.3 kgf•m, 39 lb•ft)	
Locknut (rear shock absorber lock- nut)	M60	1	10 Nm (1.0 kgf•m, 7.4 lb•ft)	
Relay arm nut (swingarm side) ◊	M14	1	70 Nm (7.0 kgf•m, 52 lb•ft)	
Connecting arm nut (relay arm side) ◊	M14	1	80 Nm (8.0 kgf•m, 59 lb•ft)	
Connecting arm nut (frame side) ◊	M14	1	80 Nm (8.0 kgf•m, 59 lb•ft)	
Brake hose holder screw ◊	M5	4	3.5 Nm (0.35 kgf•m, 2.6 lb•ft)	
Drive chain tensioner bolt (upper side)	M8	1	16 Nm (1.6 kgf•m, 12 lb•ft)	
Drive chain tensioner bolt (lower side)	M8	1	16 Nm (1.6 kgf•m, 12 lb•ft)	
Bolt (drive chain support)	M6	1	7 Nm (0.7 kgf•m, 5.2 lb•ft)	
Drive chain support nut	M6	2	7 Nm (0.7 kgf•m, 5.2 lb•ft)	
Drive chain guide bolt	M5	3	4.0 Nm (0.40 kgf•m, 3.0 lb•ft)	
Bolt (rear frame cover) (left) ◊	M6	2	7 Nm (0.7 kgf•m, 5.2 lb•ft)	
Fuel tank bolt (front side) ◊	M6	2	7 Nm (0.7 kgf•m, 5.2 lb•ft)	
Fuel tank bolt (boss) ◊	M6	2	7 Nm (0.7 kgf•m, 5.2 lb•ft)	
Fuel tank bolt (rear side)	M6	1	9 Nm (0.9 kgf•m, 6.6 lb•ft)	
Fuel tank bracket bolt	M6	2	7 Nm (0.7 kgf•m, 5.2 lb•ft)	
Fuel pump bolt ◊	M5	5	7 Nm (0.7 kgf•m, 5.2 lb•ft)	
Screw (fuel inlet pipe)	M5	2	3.5 Nm (0.35 kgf•m, 2.6 lb•ft)	
Bolt (fuel tank cap cover)	M6	2	4.0 Nm (0.40 kgf•m, 3.0 lb•ft)	
Seat set bracket screw	M6	1	7 Nm (0.7 kgf•m, 5.2 lb•ft)	
Seat bolt ◊	M8	2	22 Nm (2.2 kgf•m, 16 lb•ft)	
Side cover bolt (left) ◊	M6	2	7 Nm (0.7 kgf•m, 5.2 lb•ft)	
Side cover bolt (right) ◊	M6	2	7 Nm (0.7 kgf•m, 5.2 lb•ft)	
Air scoop bolt (frame) ◊	M6	2	7 Nm (0.7 kgf•m, 5.2 lb•ft)	
Air scoop bolt (fuel tank) ◊	M6	2	7 Nm (0.7 kgf•m, 5.2 lb•ft)	
Air scoop bolt (radiator guard) ◊	M6	4	7 Nm (0.7 kgf•m, 5.2 lb•ft)	
Front fender bolt ◊	M6	4	10 Nm (1.0 kgf•m, 7.4 lb•ft)	
Rear fender bolt (front side) ◊	M6	4	7 Nm (0.7 kgf•m, 5.2 lb•ft)	
Rear fender bolt (rear side) ◊	M6	2	16 Nm (1.6 kgf•m, 12 lb•ft)	
Headlight body and headlight stay bolt	M6	2	7 Nm (0.7 kgf•m, 5.2 lb•ft)	
Multi-function meter nut	M5	2	3.8 Nm (0.38 kgf•m, 2.8 lb•ft)	

Item	Thread size	Quantity	Tightening torque	Remarks
Multi-function meter bracket bolt	M6	1	7 Nm (0.7 kgf•m, 5.2 lb•ft)	
Front brake hose guide and head light stay bolt	M5	1	3.8 Nm (0.38 kgf•m, 2.8 lb•ft)	
Screw (mud flap) ◊	—	2	1.3 Nm (0.13 kgf•m, 0.95 lb•ft)	
Frame ground bolt (negative battery lead)	M5	1	7 Nm (0.7 kgf•m, 5.2 lb•ft)	

Tip ❷: Lower ring nut (XEF 250 / XEF 450 versions)

- First, tighten the lower ring nut approximately **38 Nm (3.8 kgf•m, 28 lb•ft)** by using the steering nut wrench, then loosen the lower ring nut one turn.
- Retighten the lower ring nut **7 Nm (0.7 kgf•m, 5.2 lb•ft)**.

Engine tightening torques (XXF 250 version)

ⓘ **"◊" = marked portion shall be checked for torque tightening after break-in or before each race.**

Item	Thread size	Quantity	Tightening torque	Remarks
Camshaft cap bolt	M6	8	10 N·m (1.0 kgf·m, 7.4 lb·ft)	E
Spark plug	M10	1	13 N·m (1.3 kgf·m, 9.6 lb·ft)	
Cylinder head stud bolt (exhaust pipe)	M6	2	7 N·m (0.7 kgf·m, 5.2 lb·ft)	
Oil passage plug (cylinder head)	M6	1	10 N·m (1.0 kgf·m, 7.4 lb·ft)	
Cylinder head bolt	M9	4	See tip ❶ at page 39.	M
Cylinder head nut	M6	2	10 N·m (1.0 kgf·m, 7.4 lb·ft)	
Cylinder head cover bolt	M6	2	10 N·m (1.0 kgf·m, 7.4 lb·ft)	
Cylinder bolt	M6	1	10 N·m (1.0 kgf·m, 7.4 lb·ft)	
Oil pressure check bolt	M6	1	10 N·m (1.0 kgf·m, 7.4 lb·ft)	
Balancer weight plate screw	M6	2	10 N·m (1.0 kgf·m, 7.4 lb·ft)	LT
Balancer weight gear nut	M14	1	50 N·m (5.0 kgf·m, 37 lb·ft)	
Balancer nut	M10	1	38 N·m (3.8 kgf·m, 28 lb·ft)	
Timing chain guide stopper plate (exhaust side)	M6	1	10 N·m (1.0 kgf·m, 7.4 lb·ft)	LT
Timing chain tensioner cap bolt	M6	1	6 N·m (0.6 kgf·m, 4.4 lb·ft)	
Timing chain tensioner bolt	M6	2	10 N·m (1.0 kgf·m, 7.4 lb·ft)	
Coolant drain bolt	M6	1	10 N·m (1.0 kgf·m, 7.4 lb·ft)	
Radiator hose clamp screw	M6	8	1.5 N·m (0.15 kgf·m, 1.1 lb·ft)	
Radiator bolt	M6	4	10 N·m (1.0 kgf·m, 7.4 lb·ft)	
Radiator pipe joint bolt	M6	1	10 N·m (1.0 kgf·m, 7.4 lb·ft)	
Water pump housing cover bolt	M6	4	10 N·m (1.0 kgf·m, 7.4 lb·ft)	
Water pump impeller	M8	1	14 N·m (1.4 kgf·m, 10 lb·ft)	
Oil pump assembly bolt	M5	2	5 N·m (0.5 kgf·m, 3.7 lb·ft)	LT
Oil pump cover screw	M4	1	2.0 N·m (0.20 kgf·m, 1.5 lb·ft)	
Oil strainer bolt	M6	1	10 N·m (1.0 kgf·m, 7.4 lb·ft)	
Throttle cable cover bolt	M5	1	3.5 N·m (0.35 kgf·m, 2.6 lb·ft)	
Throttle body joint bolt	M6	2	10 N·m (1.0 kgf·m, 7.4 lb·ft)	
Throttle body joint clamp screw	M5	1	3.0 N·m (0.30 kgf·m, 2.2 lb·ft)	
Air filter case joint clamp screw	M5	1	3.0 N·m (0.30 kgf·m, 2.2 lb·ft)	
Air filter case bolt	M6	3	7 N·m (0.7 kgf·m, 5.2 lb·ft)	
Clutch cable locknut (clutch cable adjuster)	M6	1	4.3 N·m (0.43 kgf·m, 3.2 lb·ft)	
Clutch cable locknut (engine side)	M8	1	7 N·m (0.7 kgf·m, 5.2 lb·ft)	
Exhaust pipe nut	M6	2	10 N·m (1.0 kgf·m, 7.4 lb·ft)	
Exhaust pipe protector screw	M6	2	10 N·m (1.0 kgf·m, 7.4 lb·ft)	LT
Exhaust pipe bracket bolt	M8	1	20 N·m (2.0 kgf·m, 15 lb·ft)	
Silencer bolt (front)	M8	1	30 N·m (3.0 kgf·m, 22 lb·ft)	
Silencer bolt (rear)	M8	1	30 N·m (3.0 kgf·m, 22 lb·ft)	
Exhaust pipe clamp bolt	M8	2	12 N·m (1.2 kgf·m, 8.9 lb·ft)	
Silencer body bolt	M5	6	8 N·m (0.8 kgf·m, 5.9 lb·ft)	LT
Oil nozzle bolt	M5	1	5 N·m (0.5 kgf·m, 3.7 lb·ft)	LT
Engine oil drain bolt	M10	1	20 N·m (2.0 kgf·m, 15 lb·ft)	
Crankcase bolt	M6	13	12 N·m (1.2 kgf·m, 8.9 lb·ft)	

Item	Thread size	Quantity	Tightening torque	Remarks
Clutch cable holder bolt	M6	2	10 N·m (1.0 kgf·m, 7.4 lb·ft)	GT
Crankshaft end accessing screw	M36	1	10 N·m (1.0 kgf·m, 7.4 lb·ft)	
Timing mark accessing screw	M14	1	6 N·m (0.6 kgf·m, 4.4 lb·ft)	
Drive sprocket cover bolt	M6	2	7 N·m (0.7 kgf·m, 5.2 lb·ft)	
Crankcase bearing cover plate screw	M8	4	22 N·m (2.2 kgf·m, 16 lb·ft)	GT
Bearing plate cover bolt (left side of the drive axle)	M6	2	12 N·m (1.2 kgf·m, 8.9 lb·ft)	GT
Plate bolt	M6	4	12 N·m (1.2 kgf·m, 8.9 lb·ft)	GT
Clutch cover bolt	M6	6	10 N·m (1.0 kgf·m, 7.4 lb·ft)	
Crankcase cover bolt (left)	M6	7	10 N·m (1.0 kgf·m, 7.4 lb·ft)	
Crankcase cover bolt (right)	M6	9	10 N·m (1.0 kgf·m, 7.4 lb·ft)	
Oil filter element cover bolt	M6	2	10 N·m (1.0 kgf·m, 7.4 lb·ft)	
Starter clutch screw	M6	8	12 N·m (1.2 kgf·m, 8.9 lb·ft)	GT
Primary drive gear nut	M16	1	105 N·m (10.5 kgf·m, 77 lb·ft)	GT
Clutch spring bolt	M6	6	10 N·m (1.0 kgf·m, 7.4 lb·ft)	
Clutch boss nut	M20	1	95 N·m (9.5 kgf·m, 70 lb·ft)	Stake. E
Drive sprocket nut	M18	1	75 N·m (7.5 kgf·m, 55 lb·ft)	Use a lock washer.
Segment	M8	1	30 N·m (3.0 kgf·m, 22 lb·ft)	
Shift guide bolt	M6	2	10 N·m (1.0 kgf·m, 7.4 lb·ft)	GT
Stopper lever bolt	M6	1	10 N·m (1.0 kgf·m, 7.4 lb·ft)	GT
Shift pedal bolt ◊	M6	1	12 N·m (1.2 kgf·m, 8.9 lb·ft)	
Generator rotor nut	M12	1	65 N·m (6.5 kgf·m, 48 lb·ft)	
Stator coil screw	M5	3	10 N·m (1.0 kgf·m, 7.4 lb·ft)	GT
Crankshaft position sensor bolt	M6	2	10 N·m (1.0 kgf·m, 7.4 lb·ft)	GT
Stator coil assembly lead holder bolt	M5	1	8 N·m (0.8 kgf·m, 5.9 lb·ft)	GT
Coolant temperature sensor	M10	1	14 N·m (1.4 kgf·m, 10 lb·ft)	
Gear position switch bolt	M5	2	3.5 N·m (0.35 kgf·m, 2.6 lb·ft)	GT
Rectifier/regulator bolt	M6	2	7 N·m (0.7 kgf·m, 5.2 lb·ft)	
ECU bolt	M5	2	3.8 N·m (0.38 kgf·m, 2.8 lb·ft)	
Ignition coil bolt	M6	2	7 N·m (0.7 kgf·m, 5.2 lb·ft)	
Starter motor bolt	M6	2	10 N·m (1.0 kgf·m, 7.4 lb·ft)	
Nut (holder)	M6	1	8 N·m (0.8 kgf·m, 5.9 lb·ft)	
Throttle position sensor screw	M5	1	3.5 N·m (0.35 kgf·m, 2.6 lb·ft)	
Intake air pressure sensor screw	M6	1	3.5 N·m (0.35 kgf·m, 2.6 lb·ft)	

Tip ❶: Cylinder head bolt (XXF 250 version)
- Tighten all the cylinder head tightening bolts evenly in the tightening order to **30 Nm (3.0 kgf•m, 22 lb•ft)**.
- Remove the one bolt according to the tightening order. When doing so, do not remove the other bolts.
- Retighten the bolt to 15 Nm (**1.5 kgf•m, 11 lb•ft**), and then tighten it further to reach the specified angle (60°).
- Remove the remaining bolts one by one in the same manner and retighten them.
- Finally, tighten all the bolts to reach the specified angle (60°).

Total tightening angle: 60° + 60° = 120°.

The first and second time, be sure to apply molybdenum disulfide oil to the bolt threads and seats as well as to both sides of the lock washers.

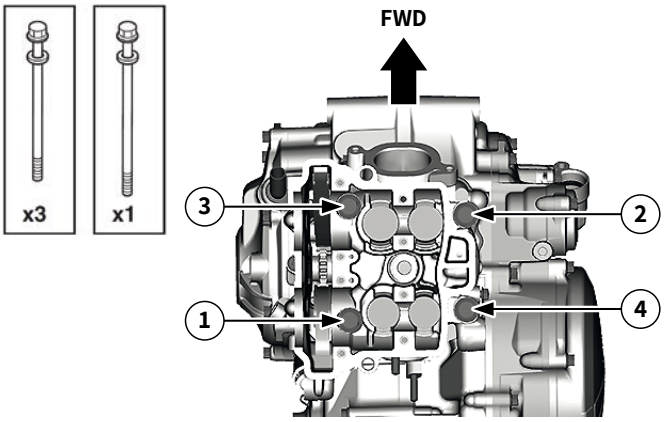

Chassis tightening torques (XXF 250 version)

"◊" = marked portion shall be checked for torque tightening after break-in or before each race.

Item	Thread size	Quantity	Tightening torque	Remarks
Upper bracket pinch bolt ◊	M8	4	21 N·m (2.1 kgf·m, 15 lb·ft)	
Lower bracket pinch bolt ◊	M8	4	21 N·m (2.1 kgf·m, 15 lb·ft)	
Steering stem nut ◊	M24	1	145 N·m (14.5 kgf·m, 107 lb·ft)	
Upper handlebar holder bolt ◊	M8	4	28 N·m (2.8 kgf·m, 21 lb·ft)	
Lower handlebar holder nut ◊	M10	2	40 N·m (4.0 kgf·m, 30 lb·ft)	
Engine stop switch screw	M3	1	0.5 N·m (0.05 kgf·m, 0.37 lb·ft)	
Start switch	M3	1	0.5 N·m (0.05 kgf·m, 0.37 lb·ft)	
Mode switch	M3	1	1.3 N·m (0.13 kgf·m, 0.95 lb·ft)	
Lower ring nut ◊	M28	1	Vedere nota ❷ a page 39.	
Damper assembly (front fork)	M51	2	30 N·m (3.0 kgf·m, 22 lb·ft)	
Inner tube and adjuster	M22	2	55 N·m (5.5 kgf·m, 41 lb·ft)	LT
Base valve (front fork)	M42	2	28 N·m (2.8 kgf·m, 21 lb·ft)	
Adjuster (damper assembly)	M12	2	29 N·m (2.9 kgf·m, 21 lb·ft)	
Bleed screw (front fork)	M5	2	1.3 N·m (0.13 kgf·m, 0.95 lb·ft)	
Front fork protector bolt ◊	M6	6	5 N·m (0.5 kgf·m, 3.7 lb·ft)	
Brake hose holder bolt ◊	M6	2	9 N·m (0.9 kgf·m, 6.6 lb·ft)	
Throttle grip cap screw	M5	2	3.8 N·m (0.38 kgf·m, 2.8 lb·ft)	
Clutch lever holder bolt	M6	2	5 N·m (0.5 kgf·m, 3.7 lb·ft)	
Clutch lever nut	M6	1	4.0 N·m (0.40 kgf·m, 3.0 lb·ft)	
Clutch lever position locknut	M5	1	4.8 N·m (0.48 kgf·m, 3.5 lb·ft)	
Front brake master cylinder holder bolt ◊	M6	2	9 N·m (0.9 kgf·m, 6.6 lb·ft)	
Front brake master cylinder reservoir cap screw	M4	2	1.5 N·m (0.15 kgf·m, 1.1 lb·ft)	
Front brake lever pivot bolt	M6	1	6 N·m (0.6 kgf·m, 4.4 lb·ft)	

Item	Thread size	Quantity	Tightening torque	Remarks
Front brake lever pivot nut	M6	1	6 N·m (0.6 kgf·m, 4.4 lb·ft)	
Locknut (front brake lever position)	M6	1	5 N·m (0.5 kgf·m, 3.7 lb·ft)	
Front brake hose holder bolt ◊	M6	1	9 N·m (0.9 kgf·m, 6.6 lb·ft)	
Front brake hose union bolt ◊	M10	2	30 N·m (3.0 kgf·m, 22 lb·ft)	
Front brake caliper bolt ◊	M8	2	28 N·m (2.8 kgf·m, 21 lb·ft)	
Front brake pad pin	M10	1	17 N·m (1.7 kgf·m, 13 lb·ft)	
Front brake pad pin plug	M10	1	2.5 N·m (0.25 kgf·m, 1.8 lb·ft)	
Front brake caliper bleed screw ◊	M8	1	6 N·m (0.6 kgf·m, 4.4 lb·ft)	
Front wheel axle nut ◊	M18	1	115 N·m (11.5 kgf·m, 85 lb·ft)	
Front wheel axle pinch bolt ◊	M8	4	21 N·m (2.1 kgf·m, 15 lb·ft)	
Front brake disc bolt ◊	M6	6	12 N·m (1.2 kgf·m, 8.9 lb·ft)	LT
Rear brake disc bolt ◊	M6	6	12 N·m (1.2 kgf·m, 8.9 lb·ft)	LT
Footrest bracket bolt	M10	4	55 N·m (5.5 kgf·m, 41 lb·ft)	LT
Rear brake pedal bolt ◊	M8	1	26 N·m (2.6 kgf·m, 19 lb·ft)	
Rear brake pedal adjusting locknut	M6	1	6 N·m (0.6 kgf·m, 4.4 lb·ft)	
Rear brake master cylinder bolt ◊	M6	2	10 N·m (1.0 kgf·m, 7.4 lb·ft)	
Rear brake master cylinder reservoir cap bolt	M4	2	1.5 N·m (0.15 kgf·m, 1.1 lb·ft)	
Rear brake hose union bolt ◊	M10	2	30 N·m (3.0 kgf·m, 22 lb·ft)	
Rear brake caliper bleed screw ◊	M8	1	6 N·m (0.6 kgf·m, 4.4 lb·ft)	
Rear brake pad pin	M10	1	17 N·m (1.7 kgf·m, 13 lb·ft)	
Rear brake pad pin plug	M10	1	2.5 N·m (0.25 kgf·m, 1.8 lb·ft)	
Rear wheel axle nut ◊	M22	1	135 N·m (13.5 kgf·m, 100 lb·ft)	
Drive chain puller locknut	M8	2	21 N·m (2.1 kgf·m, 15 lb·ft)	
Rear wheel sprocket nut ◊	M8	6	42 N·m (4.2 kgf·m, 31 lb·ft)	
Nipple (spoke) ◊	—	72	2.5 N·m (0.25 kgf·m, 1.8 lb·ft)	
Bolt (rear brake disc cover) ◊	M6	2	10 N·m (1.0 kgf·m, 7.4 lb·ft)	
Rear brake caliper protector bolt ◊	M6	2	7 N·m (0.7 kgf·m, 5.2 lb·ft)	
Engine mounting bolt (upper side) ◊	M10	2	45 N·m (4.5 kgf·m, 33 lb·ft)	
Engine mounting bolt (front side) ◊	M10	1	55 N·m (5.5 kgf·m, 41 lb·ft)	
Engine mounting bolt (lower side) ◊	M10	1	53 N·m (5.3 kgf·m, 39 lb·ft)	
Engine bracket bolt (upper side) ◊	M8	4	34 N·m (3.4 kgf·m, 25 lb·ft)	
Engine bracket bolt (lower side) ◊	M8	4	34 N·m (3.4 kgf·m, 25 lb·ft)	
Rear frame bolt ◊	M8	4	38 N·m (3.8 kgf·m, 28 lb·ft)	
Engine guard bolt (right side) ◊	M6	1	7 N·m (0.7 kgf·m, 5.2 lb·ft)	
Pivot shaft nut ◊	M16	1	85 N·m (8.5 kgf·m, 63 lb·ft)	
Rear shock absorber assembly upper nut ◊	M10	1	56 N·m (5.6 kgf·m, 41 lb·ft)	
Rear shock absorber assembly lower nut ◊	M10	1	53 N·m (5.3 kgf·m, 39 lb·ft)	
Locknut (rear shock absorber lock- nut)	M60	1	10 N·m (1.0 kgf·m, 7.4 lb·ft)	
Relay arm nut (swingarm side) ◊	M14	1	70 N·m (7.0 kgf·m, 52 lb·ft)	
Connecting arm nut (relay arm side) ◊	M14	1	80 N·m (8.0 kgf·m, 59 lb·ft)	
Connecting arm nut (frame side) ◊	M14	1	80 N·m (8.0 kgf·m, 59 lb·ft)	
Brake hose holder screw ◊	M5	4	3.5 N·m (0.35 kgf·m, 2.6 lb·ft)	
Drive chain tensioner bolt (upper side)	M8	1	16 N·m (1.6 kgf·m, 12 lb·ft)	
Drive chain tensioner bolt (lower side)	M8	1	16 N·m (1.6 kgf·m, 12 lb·ft)	
Bolt (drive chain support)	M6	1	7 N·m (0.7 kgf·m, 5.2 lb·ft)	
Drive chain support nut	M6	2	7 N·m (0.7 kgf·m, 5.2 lb·ft)	

Item	Thread size	Quantity	Tightening torque	Remarks
Drive chain guide bolt	M5	3	4.0 N·m (0.40 kgf·m, 3.0 lb·ft)	
Fuel tank bolt (front side) ◊	M6	2	7 N·m (0.7 kgf·m, 5.2 lb·ft)	
Fuel tank bolt (rear side)	M6	1	9 N·m (0.9 kgf·m, 6.6 lb·ft)	
Fuel tank bracket bolt (rear side)	M6	2	7 N·m (0.7 kgf·m, 5.2 lb·ft)	
Fuel pump bolt ◊	M5	6	4.0 N·m (0.40 kgf·m, 3.0 lb·ft)	
Screw (fuel inlet pipe)	M5	2	3.5 N·m (0.35 kgf·m, 2.6 lb·ft)	
Bolt (fuel tank cap cover)	M6	2	4.0 N·m (0.40 kgf·m, 3.0 lb·ft)	
Seat set bracket screw	M6	1	7 N·m (0.7 kgf·m, 5.2 lb·ft)	
Seat bolt ◊	M8	2	22 N·m (2.2 kgf·m, 16 lb·ft)	
Side cover bolt (left) ◊	M6	2	7 N·m (0.7 kgf·m, 5.2 lb·ft)	
Side cover bolt (right) ◊	M6	2	7 N·m (0.7 kgf·m, 5.2 lb·ft)	
Air scoop bolt (frame) ◊	M6	2	7 N·m (0.7 kgf·m, 5.2 lb·ft)	
Air scoop bolt (fuel tank) ◊	M6	2	7 N·m (0.7 kgf·m, 5.2 lb·ft)	
Air scoop bolt (radiator guard) ◊	M6	4	7 N·m (0.7 kgf·m, 5.2 lb·ft)	
Front fender bolt ◊	M6	4	10 N·m (1.0 kgf·m, 7.4 lb·ft)	
Rear fender bolt (front side) ◊	M6	4	7 N·m (0.7 kgf·m, 5.2 lb·ft)	
Rear fender bolt (rear side) ◊	M6	2	16 N·m (1.6 kgf·m, 12 lb·ft)	
Screw (mud flap) ◊	—	2	1.3 N·m (0.13 kgf·m, 0.95 lb·ft)	
Number plate bolt ◊	M6	1	7 N·m (0.7 kgf·m, 5.2 lb·ft)	
Frame ground bolt (negative battery lead)	M6	1	7 N·m (0.7 kgf·m, 5.2 lb·ft)	

Tip ❷: Lower ring nut (XXF 250 version)

- First, tighten the lower ring nut approximately **38 Nm (3.8 kgf•m, 28 lb•ft)** by using the steering nut wrench, then loosen the lower ring nut one turn.
- Retighten the lower ring nut **7 Nm (0.7 kgf•m, 5.2 lb•ft)**.

Engine tightening torques (XXF 450 version)

ⓘ **"◊" = marked portion shall be checked for torque tightening after break-in or before each race.**

Item	Thread size	Quantity	Tightening torque	Remarks
Camshaft cap bolt	M6	8	10 N·m (1.0 kgf·m, 7.4 lb·ft)	E
Spark plug	M10	1	13 N·m (1.3 kgf·m, 9.6 lb·ft)	
Cylinder head stud bolt (exhaust pipe)	M6	3	7 N·m (0.7 kgf·m, 5.2 lb·ft)	
Oil passage plug (cylinder head)	M6	2	10 N·m (1.0 kgf·m, 7.4 lb·ft)	GT
Cylinder head bolt	M10	4	Vedere nota ❶ a page 42.	M
Cylinder head bolt	M6	3	12 N·m (1.2 kgf·m, 8.9 lb·ft)	
Cylinder head cover bolt	M6	3	10 N·m (1.0 kgf·m, 7.4 lb·ft)	
Stud bolt (cylinder head cover)	M6	1	10 N·m (1.0 kgf·m, 7.4 lb·ft)	GT
Cylinder head cover breather plate bolt	M6	2	10 N·m (1.0 kgf·m, 7.4 lb·ft)	GT
Oil nozzle (cylinder head)	M6	1	3.0 N·m (0.30 kgf·m, 2.2 lb·ft)	
Cylinder bolt	M6	1	10 N·m (1.0 kgf·m, 7.4 lb·ft)	
Balancer driven gear nut	M14	1	50 N·m (5.0 kgf·m, 37 lb·ft)	Use a lock washer.
Timing chain guide stopper plate (exhaust side)	M6	1	10 N·m (1.0 kgf·m, 7.4 lb·ft)	GT
Timing chain tensioner cap bolt	M6	1	6 N·m (0.6 kgf·m, 4.4 lb·ft)	
Timing chain tensioner bolt	M6	2	10 N·m (1.0 kgf·m, 7.4 lb·ft)	
Coolant drain bolt	M6	1	10 N·m (1.0 kgf·m, 7.4 lb·ft)	
Radiator hose clamp screw	M6	8	1.5 N·m (0.15 kgf·m, 1.1 lb·ft)	
Radiator bolt	M6	4	10 N·m (1.0 kgf·m, 7.4 lb·ft)	
Radiator pipe joint bolt	M6	1	10 N·m (1.0 kgf·m, 7.4 lb·ft)	
Water pump housing cover bolt	M6	2	10 N·m (1.0 kgf·m, 7.4 lb·ft)	
Oil pump bolt	M5	2	5 N·m (0.5 kgf·m, 3.7 lb·ft)	GT
Oil pump cover bolt	M4	1	6 N·m (0.6 kgf·m, 4.4 lb·ft)	GT
Oil strainer bolt	M6	2	10 N·m (1.0 kgf·m, 7.4 lb·ft)	GT
Throttle cable cover bolt	M5	1	3.5 N·m (0.35 kgf·m, 2.6 lb·ft)	
Throttle body joint bolt	M6	2	10 N·m (1.0 kgf·m, 7.4 lb·ft)	
Throttle body joint clamp screw	M5	1	3.0 N·m (0.30 kgf·m, 2.2 lb·ft)	
Air filter case joint clamp screw	M5	1	3.0 N·m (0.30 kgf·m, 2.2 lb·ft)	
Air filter case bolt	M6	3	7 N·m (0.7 kgf·m, 5.2 lb·ft)	
Air filter case bracket bolt	M6	4	7 N·m (0.7 kgf·m, 5.2 lb·ft)	
Intake air temperature sensor screw	M5	1	1.5 N·m (0.15 kgf·m, 1.1 lb·ft)	
Clutch cable locknut (clutch cable adjuster)	M6	1	4.3 N·m (0.43 kgf·m, 3.2 lb·ft)	
Clutch cable locknut (engine side)	M8	1	7 N·m (0.7 kgf·m, 5.2 lb·ft)	
Exhaust pipe nut	M6	3	10 N·m (1.0 kgf·m, 7.4 lb·ft)	
Exhaust pipe protector screw	M5	2	5 N·m (0.5 kgf·m, 3.7 lb·ft)	GT
Exhaust pipe bracket bolt	M8	1	20 N·m (2.0 kgf·m, 15 lb·ft)	
Silencer bolt (front)	M8	1	30 N·m (3.0 kgf·m, 22 lb·ft)	
Silencer bolt (rear)	M8	1	30 N·m (3.0 kgf·m, 22 lb·ft)	
Exhaust pipe clamp bolt	M8	2	12 N·m (1.2 kgf·m, 8.9 lb·ft)	
Silencer body bolt	M5	6	8 N·m (0.8 kgf·m, 5.9 lb·ft)	GT

Item	Thread size	Quantity	Tightening torque	Remarks
Oil nozzle (crankcase)	M5	1	0.5 N·m (0.05 kgf·m, 0.37 lb·ft)	
Oil nozzle bolt	M6	1	10 N·m (1.0 kgf·m, 7.4 lb·ft)	
Engine oil drain bolt (crankcase)	M10	1	20 N·m (2.0 kgf·m, 15 lb·ft)	
Engine oil drain bolt (oil tank)	M6	1	10 N·m (1.0 kgf·m, 7.4 lb·ft)	
Crankcase bolt	M6	9	12 N·m (1.2 kgf·m, 8.9 lb·ft)	
Crankshaft end accessing screw	M36	1	10 N·m (1.0 kgf·m, 7.4 lb·ft)	
Timing mark accessing screw	M14	1	6 N·m (0.6 kgf·m, 4.4 lb·ft)	
Drive sprocket cover bolt	M6	2	7 N·m (0.7 kgf·m, 5.2 lb·ft)	
Crankcase bearing cover plate screw	M8	4	30 N·m (3.0 kgf·m, 22 lb·ft)	
Bearing plate cover bolt (left side of the drive axle)	M6	2	12 N·m (1.2 kgf·m, 8.9 lb·ft)	
Plate bolt	M6	4	12 N·m (1.2 kgf·m, 8.9 lb·ft)	
Clutch cover bolt	M6	6	10 N·m (1.0 kgf·m, 7.4 lb·ft)	
Crankcase cover bolt (left)	M6	8	10 N·m (1.0 kgf·m, 7.4 lb·ft)	
Crankcase cover bolt (right)	M6	10	10 N·m (1.0 kgf·m, 7.4 lb·ft)	
Oil filter element cover bolt	M6	2	10 N·m (1.0 kgf·m, 7.4 lb·ft)	
Starter clutch idle gear holder bolt	M6	2	12 N·m (1.2 kgf·m, 8.9 lb·ft)	
Primary drive gear nut	M20	1	120 N·m (12 kgf·m, 89 lb·ft)	E
Bolt (pressure plate 1)	M6	6	10 N·m (1.0 kgf·m, 7.4 lb·ft)	
Clutch boss nut	M20	1	105 N·m (10.5 kgf·m, 77 lb·ft)	Stake.
Bolt (clutch release)	M6	2	10 N·m (1.0 kgf·m, 7.4 lb·ft)	
Drive sprocket nut	M20	1	90 N·m (9.0 kgf·m, 66 lb·ft)	Use a lock washer.
Segment bolt	M8	1	30 N·m (3.0 kgf·m, 22 lb·ft)	
Shift guide bolt	M6	2	10 N·m (1.0 kgf·m, 7.4 lb·ft)	
Stopper lever bolt	M6	1	10 N·m (1.0 kgf·m, 7.4 lb·ft)	
Shift pedal bolt ◊	M6	1	12 N·m (1.2 kgf·m, 8.9 lb·ft)	
Generator rotor nut	M12	1	65 N·m (6.5 kgf·m, 48 lb·ft)	
Stator coil screw	M5	3	10 N·m (1.0 kgf·m, 7.4 lb·ft)	
Crankshaft position sensor bolt	M6	2	10 N·m (1.0 kgf·m, 7.4 lb·ft)	
Gear position switch bolt	M5	2	3.5 N·m (0.35 kgf·m, 2.6 lb·ft)	
Rectifier/regulator bolt	M6	2	7 N·m (0.7 kgf·m, 5.2 lb·ft)	
ECU bolt	M6	2	7 N·m (0.7 kgf·m, 5.2 lb·ft)	
Ignition coil bolt	M6	2	7 N·m (0.7 kgf·m, 5.2 lb·ft)	
Starter motor bolt	M6	1	10 N·m (1.0 kgf·m, 7.4 lb·ft)	
Nut (holder)	M6	1	8 N·m (0.8 kgf·m, 5.9 lb·ft)	
Throttle position sensor screw	M5	1	3.5 N·m (0.35 kgf·m, 2.6 lb·ft)	
Intake air pressure sensor screw	M6	1	3.5 N·m (0.35 kgf·m, 2.6 lb·ft)	

Tip ❶: Cylinder head bolt (XXF 450 version)
- First, tighten the cylinder head bolts to **36 N·m (3.6 kgf·m, 27 lb·ft)** in the proper tightening sequence and remove them.
- Retighten the cylinder head bolts to **18 N·m (1.8 kgf·m, 13 lb·ft)** in the proper tightening sequence.
- Tighten all bolts to reach the specified angle (90°) in a diagonal sequence.
- Then tighten the cylinder head bolts further to reach the specified angle (60°) in the proper tightening sequence.

The first and second time, be sure to apply molybdenum disulfide grease to the bolt threads and seats as well as to both sides of the washers.

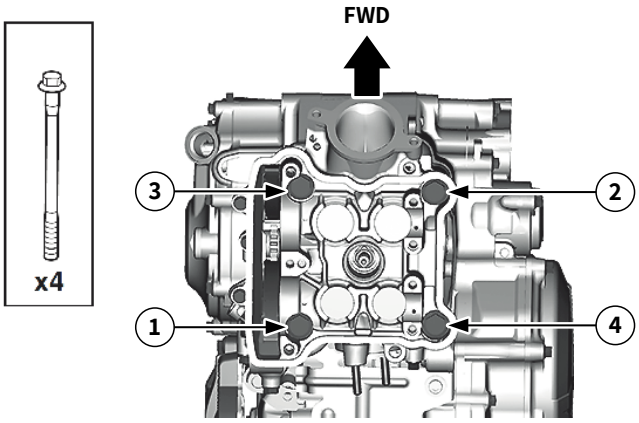

Chassis tightening torques (XXF 450 version)

"◊" = marked portion shall be checked for torque tightening after break-in or before each race.

Item	Thread size	Quantity	Tightening torque	Remarks
Upper bracket pinch bolt ◊	M8	4	21 N·m (2.1 kgf·m, 15 lb·ft)	
Lower bracket pinch bolt ◊	M8	4	21 N·m (2.1 kgf·m, 15 lb·ft)	
Steering stem nut ◊	M24	1	145 N·m (14.5 kgf·m, 107 lb·ft)	
Upper handlebar holder bolt ◊	M8	4	28 N·m (2.8 kgf·m, 21 lb·ft)	
Lower handlebar holder nut ◊	M10	2	40 N·m (4.0 kgf·m, 30 lb·ft)	
Stop switch screw	M3	1	0.5 N·m (0.05 kgf·m, 0.37 lb·ft)	
Start switch	M3	1	0.5 N·m (0.05 kgf·m, 0.37 lb·ft)	
Modal switch	M3	1	1.3 N·m (0.13 kgf·m, 0.95 lb·ft)	
Lower ring nut ◊	M28	1	Vedere nota ❷ a page 44.	
Damper assembly (front fork)	M51	2	30 N·m (3.0 kgf·m, 22 lb·ft)	
Inner tube and Adjuster	M22	2	55 N·m (5.5 kgf·m, 41 lb·ft)	
Base valve (front fork)	M42	2	28 N·m (2.8 kgf·m, 21 lb·ft)	
Adjuster (damper assembly)	M12	2	29 N·m (2.9 kgf·m, 21 lb·ft)	
Bleed screw (front fork)	M5	2	1.3 N·m (0.13 kgf·m, 0.95 lb·ft)	
Screw (adjuster knob)	M4	2	0.6 N·m (0.06 kgf·m, 0.44 lb·ft)	
Front fork protector bolt ◊	M6	6	9 N·m (0.9 kgf·m, 6.6 lb·ft)	
Brake hose holder bolt ◊	M6	2	3.8 N·m (0.38 kgf·m, 2.8 lb·ft)	
Clutch lever holder bolt	M6	2	5 N·m (0.5 kgf·m, 3.7 lb·ft)	
Clutch lever nut	M6	2	4.0 N·m (0.40 kgf·m, 3.0 lb·ft)	
Clutch lever position locknut	M5	1	4.8 N·m (0.48 kgf·m, 3.5 lb·ft)	
Front brake master cylinder holder bolt ◊	M6	2	9 N·m (0.9 kgf·m, 6.6 lb·ft)	
Front brake master cylinder reservoir cap screw	M5	1	1.5 N·m (0.15 kgf·m, 1.1 lb·ft)	
Front brake lever pivot bolt	M6	2	6 N·m (0.6 kgf·m, 4.4 lb·ft)	
Front brake lever pivot nut	M4	2	6 N·m (0.6 kgf·m, 4.4 lb·ft)	
Locknut (front brake lever position)	M6	1	5 N·m (0.5 kgf·m, 3.7 lb·ft)	

Item	Thread size	Quantity	Tightening torque	Remarks
Front brake hose support bolt ◊	M6	1	5 N·m (0.5 kgf·m, 3.7 lb·ft)	
Front brake hose support bolt ◊	M5	1	5 N·m (0.5 kgf·m, 3.7 lb·ft)	
Front brake hose union bolt ◊	M10	2	30 N·m (3.0 kgf·m, 22 lb·ft)	
Front brake caliper bolt ◊	M8	2	28 N·m (2.8 kgf·m, 21 lb·ft)	
Front brake pad pin	M10	1	17 N·m (1.7 kgf·m, 13 lb·ft)	
Front brake pad pin plug	M10	1	2.5 N·m (0.25 kgf·m, 1.8 lb·ft)	
Front brake caliper bleed screw ◊	M8	1	5 N·m (0.5 kgf·m, 3.7 lb·ft)	
Front wheel axle nut ◊	M18	1	115 N·m (11.5 kgf·m, 85 lb·ft)	
Front wheel axle pinch bolt ◊	M8	4	21 N·m (2.1 kgf·m, 15 lb·ft)	
Front brake disc bolt ◊	M6	6	12 N·m (1.2 kgf·m, 8.9 lb·ft)	T
Rear brake disc bolt ◊	M6	6	12 N·m (1.2 kgf·m, 8.9 lb·ft)	T
Footrest bracket bolt	M10	4	55 N·m (5.5 kgf·m, 41 lb·ft)	T
Rear brake pedal bolt ◊	M8	1	26 N·m (2.6 kgf·m, 19 lb·ft)	
Rear brake pedal adjusting locknut	M6	1	6 N·m (0.6 kgf·m, 4.4 lb·ft)	
Rear brake master cylinder bolt ◊	M6	2	10 N·m (1.0 kgf·m, 7.4 lb·ft)	
Rear brake master cylinder reservoir cap bolt	M4	2	1.5 N·m (0.15 kgf·m, 1.1 lb·ft)	
Rear brake hose union bolt ◊	M10	2	30 N·m (3.0 kgf·m, 22 lb·ft)	
Rear brake caliper bleed screw ◊	M8	1	5 N·m (0.5 kgf·m, 3.7 lb·ft)	
Rear brake pad pin	M10	1	17 N·m (1.7 kgf·m, 13 lb·ft)	
Rear brake pad pin plug	M10	1	2.5 N·m (0.25 kgf·m, 1.8 lb·ft)	
Rear wheel axle nut ◊	M22	1	135 N·m (13.5 kgf·m, 100 lb·ft)	
Drive chain puller locknut	M8	2	21 N·m (2.1 kgf·m, 15 lb·ft)	
Rear wheel sprocket nut ◊	M8	6	42 N·m (4.2 kgf·m, 31 lb·ft)	
Nipple (spoke) ◊	—	72	2.5 N·m (0.25 kgf·m, 1.8 lb·ft)	
Rear brake caliper protector bolt ◊	M6	2	7 N·m (0.7 kgf·m, 5.2 lb·ft)	
Engine mounting bolt (upper side) ◊	M10	2	45 N·m (4.5 kgf·m, 33 lb·ft)	
Engine mounting bolt (front side) ◊	M10	1	55 N·m (5.5 kgf·m, 41 lb·ft)	
Engine mounting bolt (lower side) ◊	M10	1	53 N·m (5.3 kgf·m, 39 lb·ft)	
Engine bracket bolt (upper side) ◊	M8	4	34 N·m (3.4 kgf·m, 25 lb·ft)	
Engine bracket bolt (front side) ◊	M8	2	34 N·m (3.4 kgf·m, 25 lb·ft)	
Rear frame bolt ◊	M8	4	38 N·m (3.8 kgf·m, 28 lb·ft)	
Engine guard bolt (right side) ◊	M6	1	7 N·m (0.7 kgf·m, 5.2 lb·ft)	
Pivot shaft nut ◊	M16	1	75 N·m (7.5 kgf·m, 55 lb·ft)	B
Rear shock absorber assembly upper nut ◊	M10	1	56 N·m (5.6 kgf·m, 41 lb·ft)	
Rear shock absorber assembly lower nut ◊	M10	1	53 N·m (5.3 kgf·m, 39 lb·ft)	
Relay arm nut (swingarm side) ◊	M14	1	70 N·m (7.0 kgf·m, 52 lb·ft)	
Connecting arm nut (relay arm side) ◊	M14	1	80 N·m (8.0 kgf·m, 59 lb·ft)	
Connecting arm nut (frame side) ◊	M14	1	80 N·m (8.0 kgf·m, 59 lb·ft)	
Brake hose holder screw ◊	M5	4	3.5 N·m (0.35 kgf·m, 2.6 lb·ft)	
Drive chain tensioner bolt (upper side)	M8	1	16 N·m (1.6 kgf·m, 12 lb·ft)	
Drive chain tensioner bolt (lower side)	M8	1	16 N·m (1.6 kgf·m, 12 lb·ft)	
Bolt (drive chain support)	M6	1	7 N·m (0.7 kgf·m, 5.2 lb·ft)	
Drive chain support nut	M6	2	7 N·m (0.7 kgf·m, 5.2 lb·ft)	
Drive chain guide bolt	M5	3	4.0 N·m (0.40 kgf·m, 3.0 lb·ft)	
Fuel tank bolt (front side) ◊	M6	2	8 N·m (0.8 kgf·m, 5.9 lb·ft)	
Screw (fuel tank)	M6	1	4.0 N·m (0.40 kgf·m, 3.0 lb·ft)	

Item	Thread size	Quantity	Tightening torque	Remarks
Fuel pump bolt ◊	M5	5	7 N·m (0.7 kgf·m, 5.2 lb·ft)	
Screw (fuel inlet pipe)	M5	2	3.5 N·m (0.35 kgf·m, 2.6 lb·ft)	
Seat set bracket screw	M6	1	7 N·m (0.7 kgf·m, 5.2 lb·ft)	
Seat bolt ◊	M8	2	13 N·m (1.3 kgf·m, 9.6 lb·ft)	
Side cover bolt (left) ◊	M6	2	7 N·m (0.7 kgf·m, 5.2 lb·ft)	
Side cover bolt (right) ◊	M6	2	7 N·m (0.7 kgf·m, 5.2 lb·ft)	
Shroud bolt (frame) ◊	M6	2	7 N·m (0.7 kgf·m, 5.2 lb·ft)	
Shroud bolt (air filter case) ◊	M6	2	7 N·m (0.7 kgf·m, 5.2 lb·ft)	
Shroud bolt (fuel tank) ◊	M6	2	7 N·m (0.7 kgf·m, 5.2 lb·ft)	
Shroud bolt (radiator guard) ◊	M6	2	7 N·m (0.7 kgf·m, 5.2 lb·ft)	
Front fender bolt ◊	M6	4	10 N·m (1.0 kgf·m, 7.4 lb·ft)	
Rear fender bolt (front side) ◊	M6	4	7 N·m (0.7 kgf·m, 5.2 lb·ft)	
Rear fender bolt (rear side) ◊	M6	2	16 N·m (1.6 kgf·m, 12 lb·ft)	
Screw (mud flap) ◊	—	2	1.3 N·m (0.13 kgf·m, 0.95 lb·ft)	
Number plate bolt ◊	M6	1	7 N·m (0.7 kgf·m, 5.2 lb·ft)	
Frame ground bolt (negative battery lead)	M6	1	7 N·m (0.7 kgf·m, 5.2 lb·ft)	
Ignition coil bracket bolt	M6	2	7 N·m (0.7 kgf·m, 5.2 lb·ft)	
Starter relay bolt ◊	M6	2	3.5 N·m (0.35 kgf·m, 2.6 lb·ft)	
Battery box bolt	M6	2	7 N·m (0.7 kgf·m, 5.2 lb·ft)	

Tip ❷: Lower ring nut (XXF 450 version)
- First, tighten the lower ring nut approximately **38 Nm (3.8 kgf•m, 28 lb•ft)** by using the steering nut wrench, then loosen the lower ring nut one turn.
- Retighten the lower ring nut **4 N·m (0.4 kgf·m, 3 lb·ft)**.

Electrical tightening torques (all versions)

Item	Thread size	Quantity	Tightening torque	Remarks
Stator	M5	3	10 Nm (1.0 m•kg, 7.4 ft•lb)	
Rotor	M12	1	65 Nm (6.5 m•kg, 48 ft•lb)	
Ignition coil	M6	2	7 Nm (0.7 m•kg, 7.2 ft•lb)	

1.10 MAINTENANCE LIMITS

Engine (XXF 250 / XEF 250 versions)

Item	Standard	Limit
Cylinder head:		
Warp limit	–	0.05 mm (0.0020 in)
Cylinder:		
Bore size	77.000–77.010 mm (3.0315–3.0319 in)	77.060 mm (3.0339 in)
Camshaft:		
Camshaft cap inside diameter	22.000–22.021 mm (0.8861–0.8670 in)	–
Camshaft journal diameter	21.959–21.972 mm (0.8645–0.8650 in)	–
Camshaft-journal-to-camshaft-cap clearance	0.028–0.062 mm (0.0011–0.0024 in)	0.080 mm (0.0032 in)
Camshaft lobe dimensions:		
Lobe height (Intake)	–	32.130 mm (1.2650 in)
Lobe height (Exhaust)	–	33.750 mm (1.3287 in)
Camshaft runout limit	–	0.030 mm (0.0012 in)
Valve, valve seat, valve guide:		
Valve clearance (cold):		
Intake	0.12–0.19 mm (0.0047–0.0075 in)	–
Exhaust	0.17–0.24 mm (0.0067–0.0094 in)	–
Valve dimensions:		
Valve seat contact width (intake)	–	1.6 mm (0.06 in)
Valve seat contact width (exhaust)	–	1.6 mm (0.06 in)
Valve stem diameter (intake)	–	4.945 mm (0.1947 in)
Valve stem diameter (exhaust)	–	4.430 mm (0.1744 in)
Valve guide inside diameter (intake)	5.000–5.012 mm (0.1969–0.1973 in)	–
Valve guide inside diameter (exhaust)	4.500–4.512 mm (0.1772–0.1776 in)	–
Valve-stem-to-valve-guide clearance (intake)	–	0.080 mm (0.0032 in)
Valve-stem-to-valve-guide clearance (exhaust)	–	0.100 mm (0.0039 in)
Valve stem runout	–	0.020 mm (0.0008 in)
Valve spring:		
Free length (intake)	–	34.94 mm (1.38 in)
Free length (exhaust)	–	33.82 mm (1.33 in)
Piston:		
Piston-to-cylinder clearance	0.030–0.055 mm (0.0012–0.0022 in)	–
Diameter	76.955–76.970 mm (3.0297–3.0303 in)	–
Measuring point (from piston skirt bottom)	4.0 mm (0.16 in)	–
Piston pin:		
Piston pin bore inside diameter	–	16.043 mm (0.6316 in)
Piston pin outside diameter	–	15.971 mm (0.6288 in)
Piston-pin-to-piston-pin-bore clearance	0.002–0.022 mm (0.0001–0.0009 in)	–
Piston ring (top ring):		
End gap (installed)	–	0.50 mm (0.0197 in)
Ring side clearance (installed)	0.030–0.065 mm (0.0012–0.0026 in)	0.115 mm (0.0045 in)
Crankshaft:		
Crank assembly width	55.93–56.00 mm (2.202–2.205 in)	–
Runout limit	–	0.030 mm (0.0012 in)

Item	Standard	Limit
Clutch (XXF 250 version):		
Clutch lever free play	7.0–12.0 mm (0.28–0.47 in)	–
Friction plate thickness	2.70–2.90 mm (0.106–0.114 in)	2.60 mm (0.102 in)
Plate quantity	8 pcs	–
Clutch plate thickness	1.50–1.70 mm (0.059–0.067 in)	–
Plate quantity	7 pcs	–
Warpage limit	–	0.10 mm (0.004 in)
Clutch spring free length	46.20 mm (1.82 in)	43.89 mm (1.73 in)
Push rod bending limit	–	0.30 mm (0.012 in)
Clutch (XEF 250 version):		
Clutch lever free play	7.0–12.0 mm (0.28–0.47 in)	–
Friction plate 1 thickness	2.70–2.90 mm (0.106–0.114 in)	2.60 mm (0.102 in)
Plate quantity	2 pcs	–
Friction plate 2 thickness	2.72–2.88 mm (0.107–0.113 in)	2.62 mm (0.103 in)
Plate quantity	6 pcs	–
Clutch plate thickness	1.50–1.70 mm (0.059–0.067 in)	–
Plate quantity	7 pcs	–
Warpage limit	–	0.10 mm (0.004 in)
Clutch spring free length	44.00 mm (1.73 in)	41.80 mm (1.65 in)
Push rod bending limit	–	0.30 mm (0.012 in)
Trasmission:		
Main axle deflection limit	–	0.08 mm (0.0032 in)
Drive axle deflection limit	–	0.08 mm (0.0032 in)
Shifter:		
Shifting type	Cam drum and guide bar	–
Guide bar bending limit	–	0.050 mm (0.0020 in)
Kickstarter type:	Kick and mesh	–
Kick clip friction force	P=7.80–11.80 N (0.80–1.20 kg, 1.75–2.65 lb)	–
Air filter oil grade (oiled filter)	Foam air filter oil or other quality foam air filter oil	–
Idling condition:		
Engine idling speed	1900–2100 giri/min.	
Exhaust gas sampling point	Sampling port on the exhaust pipe	
Coolant temperature	70–80°C (158–176°F)	
Fuel line pressure (at idle)	300–390 kPa (3.0–3.9 kgf/cm^2, 43.5–56.6 psi)	
CO%	4.0–5.0 %	
Intake vacuum	43.7 kPa (328 mmHg, 12.9 inHg)	
Throttle grip free play	3.0–6.0 mm (0.12–0.24 in)	
Cooling:		
Radiator cap valve opening pressure	107.9–137.3 kPa (1.08–1.37 kgf/cm^2, 15.6–19.9 psi)	–
Radiator capacity (including the whole circuit)	0.93 L (0.98 US qt, 0.82 Imp.qt)	–

Motore (XXF 450 / XEF 450 versions)

Elemento	Standard	Limite
Cylinder head:		
Warp limit	–	0.05 mm (0.0020 in)
Cylinder:		
Bore size	97.000–97.010 mm (3.8189–3.8193 in)	97.060 mm (3.8213 in)
Camshaft (XXF 450 version):		
Camshaft cap inside diameter	22.043–22.064 mm (0.8678–0.8687 in)	–
Camshaft journal diameter	22.002–22.015 mm (0.8662–0.8667 in)	–
Camshaft-journal-to-camshaft-cap clearance	0.028–0.062 mm (0.0011–0.0024 in)	0.080 mm (0.0032 in)
Camshaft lobe dimensions:		
Lobe height (Intake)	–	38.030 mm (1.4972 in)
Lobe height (Exhaust)	–	34.170 mm (1.3453 in)
Camshaft (XEF 450 version):		
Camshaft cap inside diameter	22.000–22.021 mm (0.8861–0.8670 in)	–
Camshaft journal diameter	21.959–21.972 mm (0.8645–0.8650 in)	–
Camshaft-journal-to-camshaft-cap clearance	0.028–0.062 mm (0.0011–0.0024 in)	–
Camshaft lobe dimensions:		
Lobe height (Intake)	–	38.030 mm (1.4972 in)
Lobe height (Exhaust)	–	34.170 mm (1.3453 in)
Camshaft runout limit	–	0.030 mm (0.0012 in)
Valve, valve seat, valve guide:		
Valve clearance (cold):		
Intake	0.10–0.17 mm (0.0039–0.0067 in)	–
Exhaust	0.15–0.22 mm (0.0059–0.0087 in)	–
Valve dimensions:		
Valve seat contact width (intake)	–	1.5 mm (0.06 in)
Valve seat contact width (exhaust)	–	1.5 mm (0.06 in)
Valve stem diameter (intake)	–	5.445 mm (0.2144 in)
Valve stem diameter (exhaust)	–	5.435 mm (0.2140 in)
Valve guide inside diameter (intake)	5.500–5.512 mm (0.2165–0.2170 in)	–
Valve guide inside diameter (exhaust)	5.500–5.512 mm (0.2165–0.2170 in)	–
Valve-stem-to-valve-guide clearance (intake)	–	0.080 mm (0.0032 in)
Valve-stem-to-valve-guide clearance (exhaust)	–	0.100 mm (0.0039 in)
Valve stem runout	–	0.020 mm (0.0008 in)
Valve spring (XXF 450 version):		
Free length (intake)	–	36.65 mm (1.44 in)
Free length (exhaust)	–	37.34 mm (1.47 in)
Valve spring (XEF 450 version):		
Free length (intake)	–	36.65 mm (1.44 in)
Free length (exhaust)	–	35.55 mm (1.40 in)
Piston:		
Piston-to-cylinder clearance	0.010–0.045 mm (0.0004–0.0018 in)	–
Diameter	96.955–96.970 mm (3.8171–3.8177 in)	–
Measuring point (from piston skirt bottom)	9.0 mm (0.35 in)	–
Piston pin:		
Piston pin bore inside diameter	–	18.045 mm (0.7104 in)
Piston pin outside diameter	–	17.981 mm (0.7079 in)
Piston-pin-to-piston-pin-bore clearance	0.004–0.024 mm (0.0002–0.0009 in)	–

Elemento	Standard	Limite
Piston ring (top ring):		
End gap (installed)	–	0.55 mm (0.0217 in)
Ring side clearance (installed)	0.015–0.065 mm (0.0006–0.0026 in)	0.120 mm (0.0047 in)
Piston ring (second piston ring):		
End gap (installed)	–	0.85 mm (0.0335 in)
Ring side clearance (installed)	0.020–0.060 mm (0.0008–0.0024 in)	0.100 mm (0.0039 in)
Crankshaft:		
Crank assembly width	61.93–62.00 mm (2.438–2.441 in)	–
Runout limit	–	0.030 mm (0.0012 in)
Clutch (XXF 450 version):		
Clutch lever free play	7.0–12.0 mm (0.28–0.47 in)	–
Friction plate 1 thickness	2.12–2.28 mm (0.083–0.090 in)	2.02 mm (0.080 in)
Plate quantity	4 pcs	–
Friction plate 2 thickness	2.12–2.28 mm (0.083–0.090 in)	2.02 mm (0.080 in)
Plate quantity	4 pcs	–
Clutch plate 1 thickness	1.35–1.45 mm (0.053–0.057 in)	–
Plate quantity	7 pcs	–
Warpage limit	–	0.10 mm (0.004 in)
Clutch plate 2 thickness	0.93–1.07 mm (0.037–0.042 in)	–
Plate quantity	2 pcs	–
Warpage limit	–	0.10 mm (0.004 in)
Clutch spring free height	5.80 mm (0.228 in)	5.51 mm (0.217 in)
Push rod bending limit	–	0.10 mm (0.004 in)
Clutch (XEF 450 version):		
Clutch lever free play	7.0–12.0 mm (0.28–0.47 in)	–
Friction plate 1 thickness	2.92–3.08 mm (0.115–0.121 in)	2.82 mm (0.111 in)
Plate quantity	6 pcs	–
Friction plate 2 thickness	2.92–3.08 mm (0.115–0.121 in)	2.82 mm (0.111 in)
Plate quantity	2 pcs	–
Clutch plate thickness	1.50–1.70 mm (0.059–0.067 in)	–
Plate quantity	7 pcs	–
Warpage limit	–	0.10 mm (0.004 in)
Clutch spring free length	48.00 mm (1.89 in)	45.60 mm (1.80 in)
Push rod bending limit	–	0.10 mm (0.004 in)
Trasmission:		
Main axle deflection limit	–	0.08 mm (0.0032 in)
Drive axle deflection limit	–	0.08 mm (0.0032 in)
Shifter:		
Shifting type	Cam drum and guide bar	–
Guide bar bending limit	–	0.050 mm (0.0020 in)
Kickstarter type:	Kick and mesh	–
Kick clip friction force	P=7.80–11.80 N (0.80–1.20 kg, 1.75–2.65 lb)	–
Air filter oil grade (oiled filter)	Foam air filter oil or other quality foam air filter oil	–

Elemento	Standard	Limite
Idling condition:		
Engine idling speed	1900–2100 giri/min.	
Exhaust gas sampling point	Sampling port on the exhaust pipe	
Coolant temperature:		
XXF 450	70–80°C (158–176°F)	
XEF 450	70–80°C (158–176°F)	
Fuel line pressure (at idle)	300–390 kPa (3.0–3.9 kgf/cm^2, 43.5–56.6 psi)	
CO%	2.0–6.0 %	
Intake vacuum	35.8 kPa (269 mmHg, 10.6 inHg)	
Throttle grip free play	3.0–6.0 mm (0.12–0.24 in)	
Cooling:		
Radiator cap valve opening pressure	107.9–137.3 kPa (1.08–1.37 kgf/cm^2, 15.6–19.9 psi)	–
Radiator capacity (including the whole circuit)	1.03 L (1.09 US qt, 0.91 Imp.qt)	–

Chassis

Item	Standard	Limit
Steering system:		
Steering bearing type	Taper roller bearing	–
Front suspension:		
Front fork travel	310.0 mm (12.2 in)	–
Fork spring free length	–	492.0 mm (19.37 in)
Optional spring	Yes	–
Oil capacity:		
XXF 250 / XEF 250 / XXF 450	501.0 cm^3 (16.94 Imp oz, 17.67 US oz)	–
XEF 450	491.0 cm^3 (16.60 US oz, 17.32 Imp.oz)	–
Oil grade	Suspension Oil S1	–
Inner tube bending limit	–	0.2 mm (0.01 in)
Rebound damping:		
Adjusting system	Mechanical adjustable type	
Unit for adjustment	Click	
Adjustment value from the start position (Soft)	20	–
Adjustment value from the start position (STD):		
XXF 250	9	–
XXF 450	10	–
XEF 250 / XEF 450	8	–
Adjustment value from the start position (Hard)	0	–
Damping in compression:		
Adjusting system	Mechanical adjustable type	
Unit for adjustment	Click	
Adjustment value from the start position (Soft)	20	–
Adjustment value from the start position (STD):		
XXF 250 / XEF 250 / XXF 450	11	–
XEF 450	12	–
Adjustment value from the start position (Hard)	0	–
Rear suspension:		
Spring preload:		
Adjusting system	Mechanical adjustable type	
Adjustment value (Soft)	1.5 mm (0.06 in)	–
Adjustment value (STD)		
XXF 250 / XEF 250 / XXF 450	7.0 mm (0.28 in)	–
XEF 450	10.0 mm (0.39 in)	–
Adjustment value (Hard)	18.0 mm (0.71 in)	–

Item	Standard	Limit
Rebound damping:		
Adjusting system	Mechanical adjustable type	
Unit for adjustment	Click	
Adjustment value from the start position (Soft)	30	–
Adjustment value from the start position (STD):		
XXF 250	10	–
XEF 250	11	–
XXF 450	13	–
XEF 450	8	–
Adjustment value from the start position (Hard)	0	–
Compression damping:		
Adjusting system	Mechanical adjustable type	
Fast compression damping:		
Unit for adjustment	Turn	
Adjustment value from the start position (Soft)	2	–
Adjustment value from the start position (STD)	1	–
Adjustment value from the start position (Hard)	0	–
Slow compression damping:		
Unit for adjustment	Click	
Adjustment value from the start position (Soft)	20	–
Adjustment value from the start position (STD):		
XXF 250 / XEF 450 / XXF 450	10	–
XEF 250	8	–
Adjustment value from the start position (Hard)	0	–
Swingarm:		
Swingarm end free play limit (radial)	–	1.0 mm (0.04 in)
Swingarm end free play limit (axial)	–	0.2–0.9 mm (0.01–0.04 in)
Wheel:		
Front wheel type	Spoke wheel	–
Rear wheel type	Spoke wheel	–
Front rim size/material	21 × 1.60/Aluminium	–
Rear rim size/material:		
XXF 250	19 × 1.85/Aluminium	–
XXF 450	19 × 2.15/Aluminium	
XEF 250 / XEF 450	18 × 2.15/Aluminium	–
Rim runout limit:		
Radial	–	2.0 mm (0.08 in)
Lateral	–	2.0 mm (0.08 in)
Front wheel axle bending limit	–	0.50 mm (0.02 in)
Rear wheel axle bending limit	–	0.50 mm (0.02 in)

Item	Standard	Limit
Drive chain:		
Measurement	520	–
Type:		
XXF 250 / XEF 250	Sealed Type	–
XXF 450 / XEF 450	Type without seal	–
Number of links	114	–
Chain slack	50.0–60.0 mm (1.97–2.36 in)	–
Chain length (15 links):		
XXF 250 / XEF 250 / XEF 450	–	239.3 mm (9.42 in)
XXF 450	–	242.9 mm (9.56 in)
Front brake:		
Front brake lever free play	0.0 mm (0.00 in)	–
Disc outside diameter × thickness	270.0 × 3.0 mm (10.63 in × 0.12 in)	–
Brake disc thickness limit	2.5 mm (0.10 in)	–
Brake disc runout limit (as measured on wheel)	0.15 mm (0.0059)	1.0 mm (0.04 in)
Master cylinder inside diameter	9.52 mm (0.37 in)	–
Caliper cylinder inside diameter (Left):		
XEF 250	22.65 mm, 22.65 mm (0.89 in, 0.89 in)	–
XXF 250 / XXF 450 / XEF 450	25.40 mm, 25.40 mm (1.00 in, 1.00 in)	–
Specified brake fluid	DOT 4	
Rear brake:		
Brake pedal position	5.0 mm (0.20 in)	–
Disc outside diameter × thickness	240.0 × 4.0 mm (9.45 in × 0.16 in)	–
Brake disc thickness limit	3.5 mm (0.14 in)	–
Brake disc runout limit (as measured on wheel)	0.15 mm (0.0059)	1.0 mm (0.04 in)
Master cylinder inside diameter	11.0 mm (0.43 in)	–
Caliper cylinder inside diameter	25.40 mm (1.00 in)	–
Specified brake fluid	DOT 4	

Electrical

Item	Standard	Limit
Tensione impianto	12 V	–
Ignition system:		
Ignition system	TCI	–
Ignition timing (B.T.D.C.)	8.0–12.0° /2000 r/min.	–
Ignition coil:		
Primary coil resistance:		
XXF 450	1.98–2.42 Ω	–
XXF 250 / XEF 250 / XEF 450	2.16–2.64 Ω	–
Secondary coil resistance:		
XXF 450	14.64–21.96 Ω	–
XXF 250 / XEF 250 / XEF 450	8.64–12.96 Ω	–
Spark plug cap:		
Resistance:		
XXF 450	10.00 Ω	–
XXF 250 / XEF 250 / XEF 450	7.50–12.50 kΩ	–
Lean angle sensor:		
Operating angle	45 °	–
Charging system:		
Charging system	AC magneto	–
Standard output:		
XXF 250	14.0 V, 5.4 A at 5000 r/min.	–
XXF 450	14.0 V, 7.1 A a 5000 giri/min.	–
XEF 250 / XEF 450	14.0 V, 10.0 A at 5000 r/min.	–
Stator coil resistance:		
XXF 250	0.512–0.768 Ω	–
XXF 450	0.408–0.612 Ω	–
XEF 250 / XEF 450	0.368–0.552 Ω	–
Rectifier / regulator:		
Regulator type	Single-phase	–
Regulated voltage (DC)	14.0–14.8 V	–
Battery:		
Voltage, capacity:		
XXF 250	12.8 V, 32Wh	–
XXF 450	12 V, 2.4 Ah (5 HR)	–
XEF 250 / XEF 450	12 V, 3.0 Ah (10 HR)	–
Indicator light (XEF 250 / XEF 450):		
Fuel level warning light:		
XEF 250	1.7 W	–
XEF 450	LED	–
Engine trouble warning light:		
XEF 250	1.7 W	–
XEF 450	LED	–

Item	Standard	Limit
Starter motor:		
Brush overall length:		
XXF 250 / XEF 250	7.0 mm (0.28 in)	3.5 mm (0.14 in)
XXF 450 / XEF 450	11.0 mm (0.43 in)	5.5 mm (0.22 in)
Brush spring force:		
XXF 250 / XEF 250	3.92–5.88 N (400–600 gf, 14.11–21.17 oz)	–
XXF 450 / XEF 450	4.80–7.20 N (489–734 gf, 17.28–25.92 oz)	–
Mica undercut (depth):		
XXF 250 / XEF 250	–	1.50 mm (0.06 in)
XXF 450 / XEF 450	–	2.40 mm (0.09 in)
Fuel injection sensor:		
Crankshaft position sensor resistance	228–342 Ω	–
Intake air temperature sensor resistance	5400–6600 Ω a 0°C (5400–6600 Ω a 32°F)	–
Intake air temperature sensor resistance:		
XXF 450	290–390 Ω a 80°C (290–390 Ω a 176°F)	–
XXF 250 / XEF 250 / XEF 450	289–391 Ω a 80°C (289–391 Ω a 176°F)	–
Coolant temperature sensor resistance:		
XXF 450	2310–2590 Ω a 20°C (2310–2590 Ω a 68°F)	–
XXF 250 / XEF 250 / XEF 450	2513–2777 Ω a 20°C (2513–2777 Ω a 68°F)	–
Coolant temperature sensor resistance:		
XXF 450	310–326 Ω a 80°C (310–326 Ω a 176°F)	–
XXF 250 / XEF 250 / XEF 450	210–221 Ω a 100°C (210–221 Ω a 212°F)	–

1.11 ELECTRICAL SYSTEM DIAGRAM

Cables colour coding

The colour of a cable can be an "A" colour or two "B" colours.

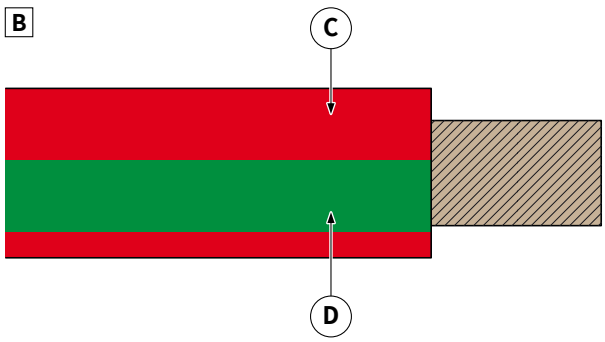

The cable which has two colours is identified by the first colour code (primary "C" or colour of the sheath) followed by the second colour code (secondary "D"): the codes are separated by a dash "-".

Examples:
- **case "A" : Blue = L ;**
- **case "B" : Red (primary) and Green (secondary) = RV.**

The following table shows the codes used in the wiring diagram to identify the colour of the cable.

Code	Cables color
A	SKY BLUE
B	WHITE
C	ORANGE
D	DARK BLUE
G	YELLOW
H	GREY
L	BLUE
M	BROWN
N	BLACK
R	RED
S	PINK
V	GREEN
Z	PURPLE

Key to the wiring diagram components (XXF 250 version)

The following table lists all the components in the wiring diagram and their numbering.

Number	Description of the electrical component
1	Crankshaft position sensor
2	AC magneto
3	Rectifier/regulator
4	Joint connector
5	Main relay
6	Engine ground
7	Battery
8	Frame ground
9	Fuse
10	Starter relay
11	Starter motor
12	Diode 1
13	Diode 2
14	CCU (Communication Control Unit)
15	Yamaha diagnostic tool coupler
16	ECU (Engine Control Unit)
17	Ignition coil
18	Spark plug
19	Fuel injector
20	Fuel pump
21	Intake air temperature sensor
22	Coolant temperature sensor
23	Throttle position sensor
24	Intake air pressure sensor
25	Engine stop switch
26	Gear position switch
27	Mode switch junction
28	Mode switch
29	Diode 3
30	Launch/traction control button
31	Fuel injector preparation 2
32	Mode switch
33	ECU (engine control unit) secondary connector
34	Wi-Fi interface
35	LC GPA (Launch/traction control) display
36	OBD diagnosis connector (to use it, first disconnect #34)

Wiring, harnesses and electrical extensions legend (XXF 250 version)

The following table lists all the wiring in the electrical system diagram and related reference.

Ref.	Description of electrical wiring
A	Battery sub-lead
B	Wire harness
C	Ignition coil sub-lead
D	CCU sub-lead
E	Wiring harness mode switch
F	LC GPA interface wiring harness (Launch/Traction control)
G	Launch/Traction control button connecting wiring harness

Wiring diagram (XXF 250 version)

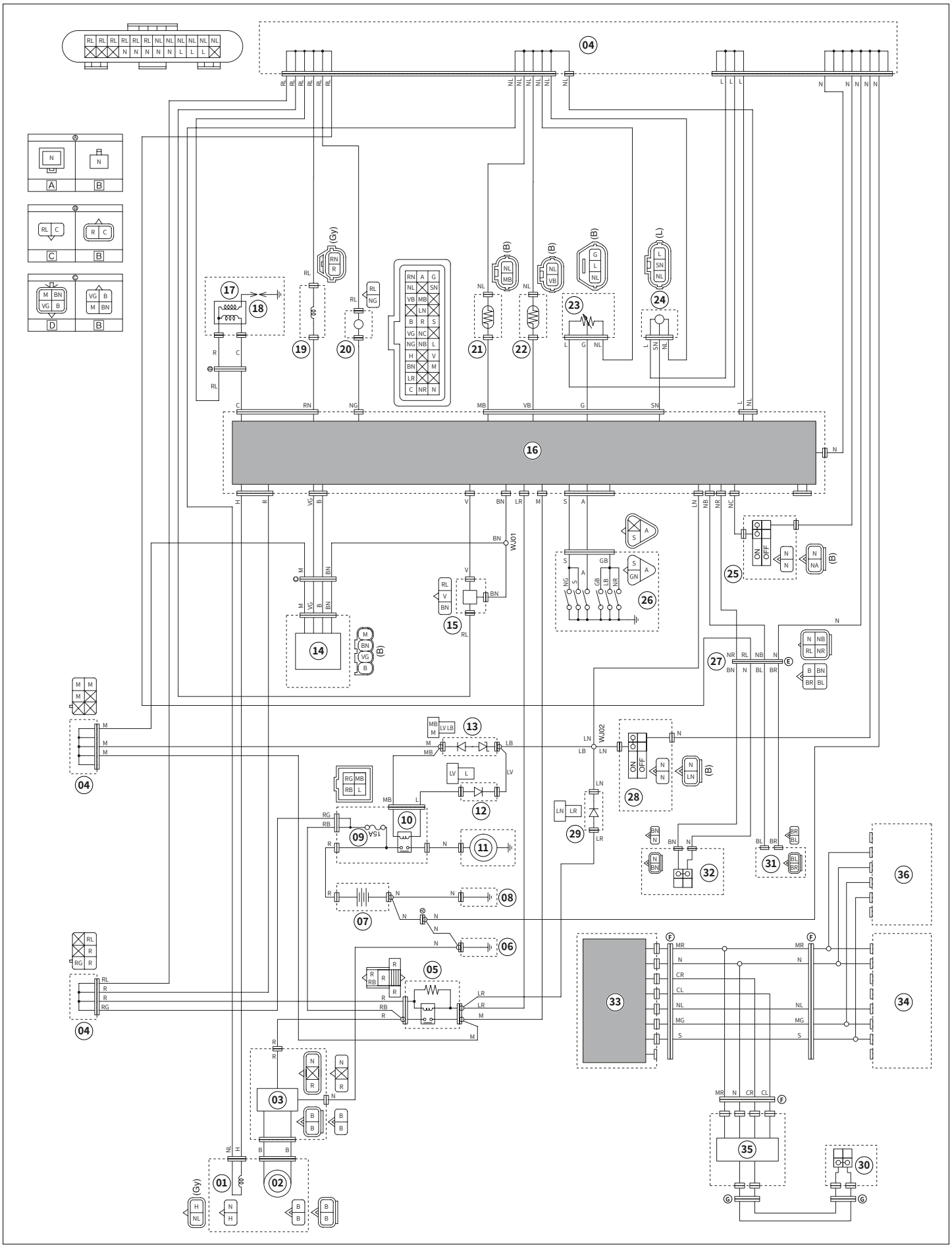

Key to the wiring diagram components (XXF 450 version)

The following table lists all the components in the wiring diagram and their numbering.

Number	Description of the electrical component
1	Crankshaft position sensor
2	AC magneto
3	Rectifier/regulator
4	Fuel injector preparation 2
5	Main relay
6	Battery
7	Engine ground
8	Frame ground
9	Fuse
10	Starter relay
11	Starter motor
12	Diode 1
13	Mode switch
14	Wi-Fi interface
15	Diagnostic tool coupler
16	ECU (Engine Control Unit)
17	Ignition coil
18	Spark plug
19	Fuel injector
20	Fuel pump
21	Intake air temperature sensor
22	Coolant temperature sensor
23	Throttle position sensor
24	Intake air pressure sensor
25	Engine stop switch
26	LC GPA (Launch/traction control) display
27	Gear position switch
28	OBD diagnosis connector (to use it, first disconnect #34)
29	Start switch

Wiring diagram (XXF 450 version)

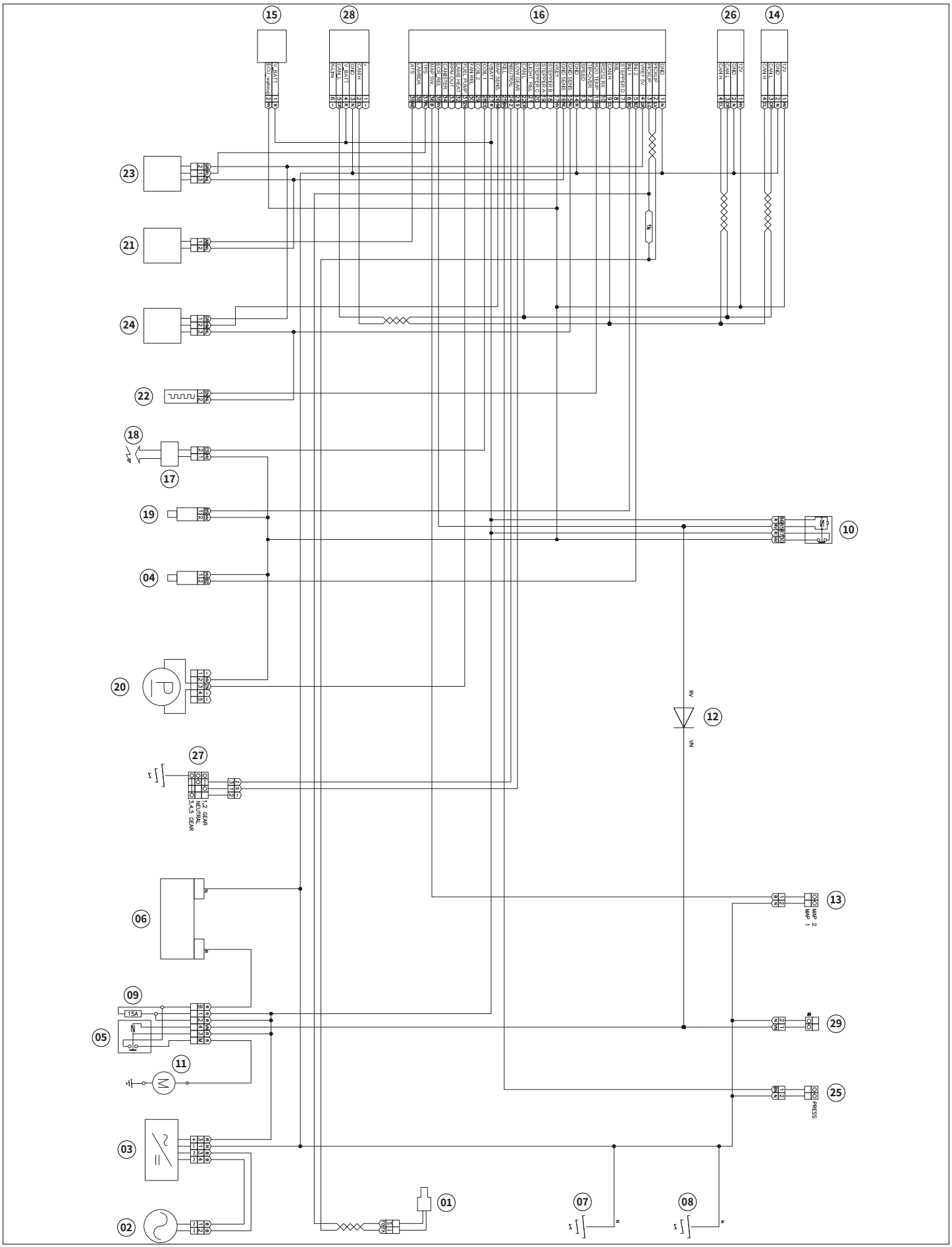

Key to the wiring diagram components (XXF 250 / XEF 450 versions)
The following table lists all the components in the wiring diagram and their numbering.

Number	Description of the electrical component
1	Engine control unit (CDI)
2	OBD diagnosis connector
3	TPS sensor
4	MAP sensor
5	ATS sensor
6	Ignition coil
7	Fuel injector 1
8	Oxygen sensor
9	Fuel pump
10	Fuel level sensor
11	Fuel reserve interface
12	Water temperature sensor
13	Negative battery pole
14	Positive battery pole
15	Starter remote control switch
16	Starter motor
17	Voltage regulator
18	Magnet flywheel
19	Pick-Up
20	Engine control remote control switch
21	Neutral gear switch
22	Fan remote control switch
23	Radiator fan
24	Engine ground point
25	Frame ground point
26	Rear left turn signal
27	Tail light
28	Rear right turn signal
29	Rear brake light switch
30	Front brake light switch
31	Right light stalk
32	Main control switch
33	Dashboard
34	Fuse box
35	Intermittent light
36	Gearshift position switch
37	Lights remote control switch
38	Handlebar devices wiring harness interconnection
39	Left light stalk
40	Left light stalk - secondary connector
41	Horn
42	Front right turn signal
43	Front headlight
44	Front left turn signal
45	Wi-Fi interface

Number	Description of the electrical component
46	Speed sensor
47	Serial communication interface
48	LC GPA module (Launch/Traction control) (optional)
49	Fuel Injector 2 (optional)
50	Engine map selector (optional)

Wiring diagram (XXF 250 / XEF 450 versions)

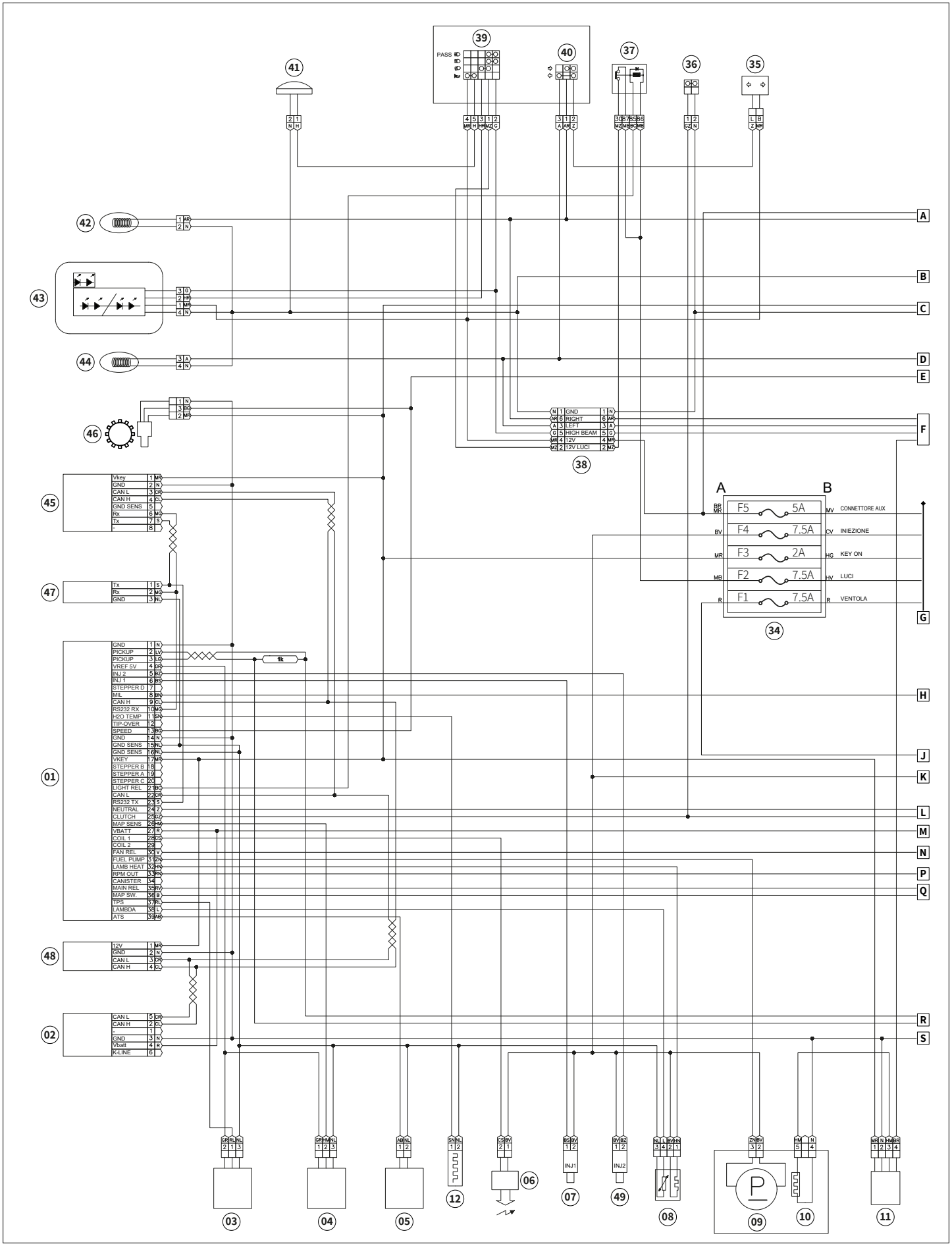

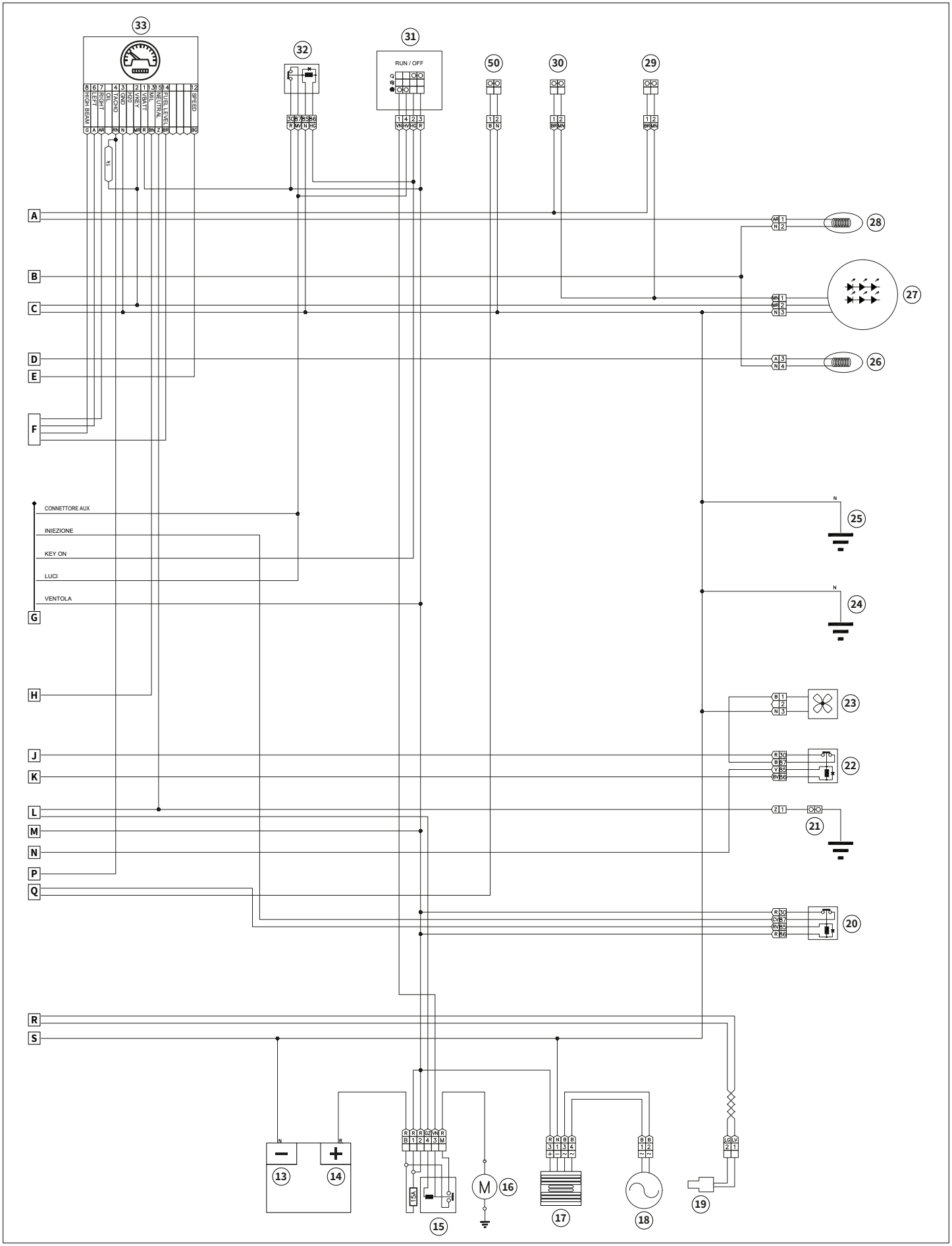
33
32
31
RUN / OFF
50
30
29
HIGH BEAM
LEFT
RIGHT
TACHO
GND
VBATT
NEUTRAL
FUEL LEVEL
SPEED
1k
A
B
C
D
E
F
G
H
J
K
L
M
N
P
Q
R
S
CONNETTORE AUX
INIEZIONE
KEY ON
LUCI
VENTOLA
28
27
26
25
24
23
22
21
20
13
14
15
16
17
18
19
15A

1.12 LAMPS (FOR XEF 250 / XEF 450 VERSIONS ONLY)

The front and rear lights are LED type, therefore they do not require maintenance.

The front and rear turn indicators are equipped with 12V - 6W halogen lamps.

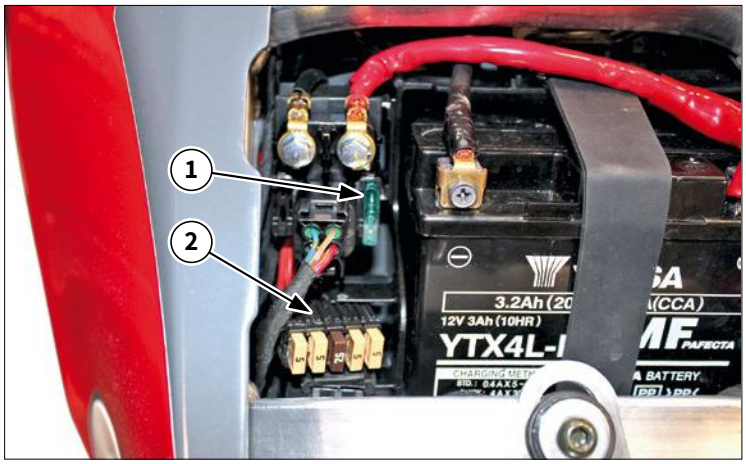

1.13 FUSES

(XXF 250 / XEF 250 / XEF 450 versions)
The battery fuse “1” is accessible by removing the seat and the protective cover of the starter remote control switch.

Battery fuse: 15 A

(XEF 250 / XEF 450 versions)
The fuse box “2” is accessible by removing the seat.

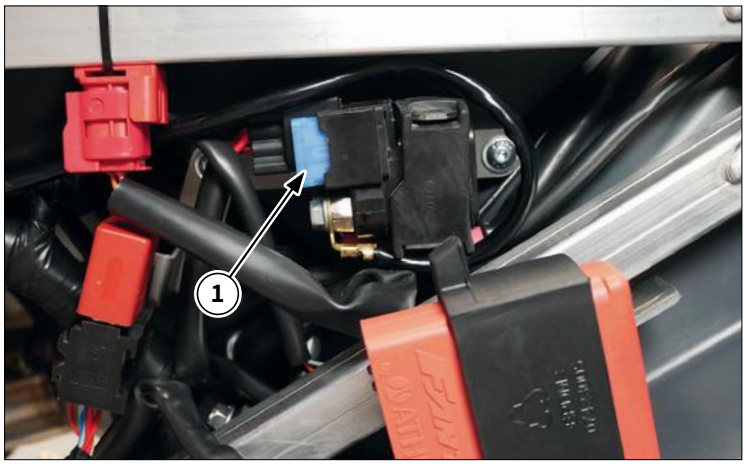

(Only for XXF 450 version)
The battery fuse “1” is accessible by removing the seat and left side panel.

Fusibile batteria: 15 A

1.14 RECOMMENDED LUBRICANTS AND LIQUIDS

⚠ **Use lubricating and fluid products that meet the equivalent specifications, or higher than those prescribed. These same indications are also valid for topping up.**

Product	Characteristics	Remarks
2-stroke gear engine oil	10W-40, 10W-50, 15W-40, 20W-40 API service SG type or higher, JASO standard Ma	Do not use mineral oils.
Grease for bearings, joints, articulations and linkage	Lithium grease	
Coolant	Antifreeze liquid based on ethylene glycol with organic additives	Do not dilute with water.
Fork oil	Fork oil gradation 7,5W or equivalent	
Transmission chain lubricant	Spray grease for transmission chains	
Brake oil	Synthetic Brake Fluid DOT 4	
Olio per filtro aria	Air Filter Special Oil	
Cleaner for electrical contacts	Contact cleaner	
Fuel	95 or 98 octane super lead-free petrol	PETROL FUEL TYPE: E5 / E10
Paste for carter and engine covers coupling	Three Bond N. 1215®	
Safety lock medium tightening	Medium threadlocker	
Safety lock strong tightening	Strong threadlocker	
Lubricant for bolts unlocking	Unblocking protective lubricant	
Anti-friction lubricant for screw tightening torques	Generic engine oil	
Oil seals and O-rings lubricant for rubber parts	Lithium soap grease	
Battery terminals	White vaseline grease	
Vehicle wash	Low pressure water at room temperature Ecological neutral liquid soap	Avoid aggressive detergents.
External cleaning of the brake system (brake discs and seats)	Spray Disc Brake Cleaner	Do not use to clean brake pads and plastic parts.

1.15 MAINTENANCE INTERVALS

⚠ **From 7000 km (4200 mi) or 9 months, repeat the maintenance intervals starting from 3000 km (1800 mi) or 3 months.**

ⓘ **Items marked with an asterisk (*) should be performed by a FANTIC dealer as they require special tools, data and technical skills.**

Periodic maintenance chart for the emission control system (for XEF 250 / XEF 450 versions only)

No.		Item	Checks and maintenance jobs	Initial / 1000 km (600 mi) or 1 month	3000 km (1800 mi) or 3 months	5000 km (3000 mi) or 6 months
1	*	Fuel line	– Check fuel hoses for cracks or damage.	√	√	√
			– Replace if necessary.			
2		Spark plug	– Check condition.	√	√	√
			– Adjust gap and clean.			
3	*	Valve clearance	– Check and adjust valve clearance when engine is cold.	√		√
4	*	Air filter element	– Clean with solvent and apply quality foam air filter oil. – Replace if necessary.	√	√	√
5	*	Breather system	– Check ventilation hose for cracks or damage and drain any deposits.	√	√	√
			– Replace (only for XEF 250).	Every 2 years		
6	*	Fuel injection	– Adjust engine idling speed.	√	√	√
7		Exhaust system	– Check for leakage. – Tighten if necessary. – Replace gasket(s) if necessary.	√	√	√
8		Engine oil	– Change (warm engine before draining).	√	√	√
9		Engine oil filter element	– Replace.	√	√	√
10		Engine oil strainer	– Clean.	√	√	√

General maintenance and lubrication chart (for XEF 250 / XEF 450 versions only)

No.		Item	Checks and maintenance jobs	Initial / 1000 km (600 mi) or 1 month	3000 km (1800 mi) or 3 months	5000 km (3000 mi) or 6 months
1		Clutch	– Check operation. – Adjust or replace cable.	√	√	√
2	*	Cooling system	– Check hoses for cracks of damage. – Replace if necessary.	√	√	√
			– Replace with ethylene glycol anti-freeze coolant.	Every 1 year		
3	*	Spark arrester	– Clean.			√
4	*	Front brake	– Check operation, fluid level, and for fluid leakage. – Replace brake pads if necessary.	√	√	√
			– Replace brake fluid every 1 year.	Every 1 year		
5	*	Rear brake	– Check operation, fluid level, and for fluid leakage. – Replace brake pads if necessary.	√	√	√
			– Replace brake fluid every 1 year.	Every 1 year		
6	*	Brake hoses	– Check for cracks or damage and replace if necessary.		√	√
7	*	Wheels	– Check runout, spoke tightness and for damage. – Tighten spokes if necessary.	Every 30 hours		

No.		Item	Checks and maintenance jobs	Initial / 1000 km (600 mi) or 1 month	3000 km (1800 mi) or 3 months	5000 km (3000 mi) or 6 months
8	*	Tires	– Check tread depth and for damage. – Replace if necessary. – Check air pressure. – Correct if necessary.	√	√	√
9	*	Wheel bearings	– Check bearings for smooth operation. – Replace if necessary.	√	√	√
10	*	Swingarm pivot bearings	– Check bearing assemblies for looseness. – Moderately repack with lithium-soap-based grease.	√	√	√
11		Drive chain	– Check chain slack/alignment and condition. – Adjust and lubricate chain with a special O-ring chain lubricant thoroughly.	Every ride		
12	*	Steering bearings	– Check bearing assemblies for looseness. – Moderately repack with lithium-soap-based grease every 1200 mi (2000 km) or 12 months (whichever comes first).	√	√	√
13		Brake and clutch lever pivot shafts	– Apply lithium-soap-based grease (all-purpose grease) or silicone grease lightly.	Every 30 hours		
14		Brake pedal pivot shafts	– Apply lithium-soap-based grease (all-purpose grease) lightly.	Every 30 hours		
15		Sidestand pivot	– Check operation. – Apply lithium-soap-based grease (all-purpose grease) lightly.	√	√	√
16	*	Front fork	– Check operation and for oil leakage. – Replace if necessary.		√	√
17	*	Shock absorber assembly	– Check operation and for oil leakage. – Replace if necessary.		√	√
18	*	Rear suspension link pivots	– Apply molybdenum disulfide grease lightly.		√	√
19	*	Control cables	– Apply chain and cable lube or engine oil 10W-30 thoroughly.	√	√	√
20	*	Throttle grip housing and cable	– Check operation and free play. – Adjust the throttle cable free play if necessary. – Lubricate the throttle grip housing and cable.	√	√	√
21	*	Chassis fasteners	– Check all chassis fitting and fasteners. – Correct if necessary.	√	√	√
22		Battery	– Check terminal for looseness and corrosion.		√	√

⚠ **The air filter needs more frequent service if you are riding in unusually wet or dusty areas.**

⚠ **Hydraulic brake service:**
After disassembling the brake master cylinders and calipers, always change the fluid. Regularly check the brake fluid levels and fill the reservoirs as required.
Every two years replace the internal components of the brake master cylinders and calipers, and change the brake fluid.
Replace the brake hoses every four years and if cracked or damaged.

Maintenance intervals for competition use (XEF 250 / XEF 450 versions)

⚠ **The following schedule is intended as a general guide to maintenance and lubrication. Bear in mind that such factors as weather, terrain, geographical location, and individual usage will alter the required maintenance and lubrication intervals. If you are a doubt as to what intervals to follow in maintaining and lubricating your machine, consult your FANTIC dealer.**

⚠ **Periodic inspection is essential in making full use of the machine performance. The service life of the parts varies substantially according to the environment in which the machine runs (e.g., rain, dirt, etc.). Therefore, earlier inspection is required by reference to the list below.**

ⓘ **Items marked with an asterisk (*) should be performed by a FANTIC dealer as they require special tools, data and technical skills.**

No.		Item	Checks and maintenance jobs	After break-in	Every race	Every third race (or 500 km)	Every fifth race (or 1000 km)	As required
1		Engine oil	– Replace.	√			√	
2	*	Valve	– Check the valve clearances.	√		√		
			– Check the valve seats and the valve stems for wear.				√	
			– Replace.					√
3	*	Valve spring	– Check the free length.				√	
			– Replace.					√
4	*	Valve lifter	– Check for scratches and wear.				√	
			– Replace.					√
5	*	Camshaft	– Inspect the camshaft surface. – Inspect the decompression system.				√	
			– Replace.					√
6	*	Camshaft sprocket	– Check for wear on the teeth and for damage.				√	
			– Replace.					√
7	*	Piston	– Inspect crack. – Inspect carbon deposits and eliminate them.				√	√
			– Clean.					√
			– Replace. (It is recommended that the piston pin and ring are also replaced at the same time.)					√
8	*	Piston ring	– Check the ring end gap.				√	
			– Replace.				√	√
9	*	Piston pin	– Inspect.				√	
			– Replace.					√
10	*	Cylinder head	– Inspect carbon deposits and eliminate them. – Change gasket.				√	
11	*	Cylinder	– Inspect score marks. – Inspect wear.				√	
			– Replace.					√
12	*	Clutch	– Inspect housing, friction plate, clutch plate and spring.	√	√			
			– Replace.					√
13	*	Transmission	– Inspect.					√
			– Replace bearings.					√
14	*	Shift fork, shift cam, guide bar	– Inspect wear.					√

No.		Item	Checks and maintenance jobs	After break-in	Every race	Every third race (or 500 km)	Every fifth race (or 1000 km)	As required
15	*	Generator rotor nut	– Retighten.	√			√	
16	*	Muffler	– Inspect and retighten.	√	√			
			– Clean.				√	
			– Replace.					√
17	*	Crank	– Inspect and clean.				√	√
18	*	Throttle body	– Inspect.					√
19		Spark plug	– Inspect and clean.	√		√		
			– Replace.					√
20		Drive chain	– Lubricate and check slack/ alignment.	√	√			
			– Replace.					√
21	*	Cooling system	– Check coolant level and leakage.	√	√			
			– Check radiator cap operation.					√
			– Replace coolant.	Every two years				√
			– Inspect hoses.		√			
22		Outside nuts and bolts	– Retighten.	√	√			
23		Air filter	– Clean and lubricate.	√	√			
			– Replace.					√
24		Oil filter	– Replace.	√			√	
25	*	Engine guard	– Replace.					√
26	*	Frame	– Clean and inspect.	√	√			
27	*	Fuel tank, fuel pump	– Clean and inspect.	√		√		
28	*	Fuel hose	– Inspect.					√
			– Replace.	Every four years				√
29	*	Brake(s)	– Adjust lever position and pedal height.	√	√			
			– Lubricate pivot point.	√	√			
			– Check brake disc surface.	√	√			
			– Check fluid level and leakage.	√	√			
			– Retighten brake disc bolts, caliper bolts, master cylinder bolts and union bolts.	√	√			
			– Replace pads.					√
			– Replace brake fluid.	Every one year				√
30	*	Front fork(s)	– Inspect and adjust.	√	√			
			– Replace oil.	√			√	
			– Replace oil seal.					√
31	*	Front fork oil seal and dust seal	– Clean and lubricate.	√	√			
32		Protector guide	– Replace.					√
33	*	Rear shock absorber	– Inspect and adjust.	√	√			
			– Lubricate. (After rain ride.)			√		√
			– Retighten.	√	√			
34	*	Chain and roller slider	– Inspect.	√	√			
35	*	Drive chain stopper	– Inspect.					√
36	*	Swingarm	– Inspect, lube and retighten.	√	√			
37	*	Relay arm, connect- ing rod	– Inspect, lube and retighten.	√	√			

No.		Item	Checks and maintenance jobs	After break-in	Every race	Every third race (or 500 km)	Every fifth race (or 1000 km)	As required
38		Sidestand	– Lubricate.					√
39	*	Steering head	– Inspect free play and retighten.	√	√			
			– Clean and lubricate.				√	
			– Replace bearings.					√
40	*	Tire, wheels	– Inspect air pressure, wheel runout, tire wear and spoke looseness.	√	√			
			– Retighten sprocket bolt.	√	√			
			– Inspect bearings.			√		
			– Replace bearings.					√
			– Lubricate.			√		
41		Throttle, control cable	– Check routing and connection.	√	√			
			– Lubricate.	√	√			

Maintenance intervals (XXF 250 / XXF 450 versions)

⚠ **The following schedule is intended as a general guide to maintenance and lubrication. Bear in mind that such factors as weather, terrain, geographical location, and individual usage will alter the required maintenance and lubrication intervals. If you are a doubt as to what intervals to follow in maintaining and lubricating your machine, consult your FANTIC dealer.**

⚠ **Periodic inspection is essential in making full use of the machine performance. The service life of the parts varies substantially according to the environment in which the machine runs (e.g., rain, dirt, etc.). Therefore, earlier inspection is required by reference to the list below.**

ⓘ **Items marked with an asterisk (*) should be performed by a FANTIC dealer as they require special tools, data and technical skills.**

No.		Item	Checks and maintenance jobs	After break-in	Every race (about 2.5 hours)	Every third race (about 7.5 hours)	Every fifth race (about 12.5 hours)	As required
1	*	Valve	– Check the valve clearances.	√		√		
			– Check the valve seats and the valve stems for wear.				√	
			– Replace.					√
2	*	Valve spring	– Check the free length.				√	
			– Replace.					√
3	*	Valve lifter	– Check for scratches and wear.				√	
			– Replace.					√
4	*	Camshaft	– Inspect the camshaft surface. – Inspect the decompression system.				√	
			– Replace.					√
5	*	Timing chain	– Check for damage and adherence.					√
			– Replace.				√	√
6	*	Timing chain tensioner	– Replace.				√	√
7	*	Camshaft sprocket	– Check for wear on the teeth and for damage.				√	
			– Replace.					√
8	*	Piston	– Inspect crack. – Inspect carbon deposits and eliminate them.					√
			– Clean.					√
			– Replace the piston, piston pin, piston pin clip, and piston ring all as a set.				√	√
9	*	Piston ring	– Check the ring end gap.					√
			– Replace the piston, piston pin, piston pin clip, and piston ring all as a set.				√	√
10	*	Piston pin	– Inspect.					√
			– Replace the piston, piston pin, piston pin clip, and piston ring all as a set.				√	√
11	*	Cylinder head	– Check the coolant passages for corrosion. – Inspect carbon deposits and eliminate them. – Check for warpage, and replace the gasket.				√	

No.		Item	Checks and maintenance jobs	After break-in	Every race (about 2.5 hours)	Every third race (about 7.5 hours)	Every fifth race (about 12.5 hours)	As required
12	*	Cylinder	– Inspect score marks. – Inspect wear.				√	
			– Replace.					√
13		Engine oil	– Check the quantity of engine oil.		√			√
			– Replace.	√		√		
14		Oil filter element	– Replace.	√			√	
15	*	Oil filter	– Clean.				√	
16	*	Clutch	– Inspect housing, friction plate, clutch plate and spring.	√	√			
			– Replace.					√
17	*	Transmission	– Inspect.					√
			– Replace bearings.					√
18	*	Shift fork, shift cam, guide bar	– Inspect wear.					√
19	*	Generator rotor nut	– Retighten.	√			√	
20	*	Muffler	– Inspect and retighten.	√	√			
			– Clean.				√	
			– Replace.			√		√
21	*	Crankshaft / Crankcase	– Inspect and clean.				√	√
22	*	Throttle body	– Inspect.					√
23		Air filter	– Clean and lubricate.	√	√			
			– Replace.					√
24		Spark plug	– Check the electrodes and the terminals for wear.	√		√		
			– Replace.					√
25	*	Cooling system	– Check coolant level and leakage.	√	√			
			– Check radiator cap operation.					√
			– Check radiator cap attached.	√	√			
			– Replace coolant.	Every two years				√
			– Inspect hoses.		√			
26	*	Engine guard	– Replace.					√
27	*	Frame	– Clean and inspect.	√	√			
28	*	Fuel tank, fuel pump	– Clean and inspect.	√		√		
29	*	Fuel hose	– Inspect.					√
			– Replace.	Every four years				√
30	*	Front fork(s)	– Clean.	√	√			
			– Check and adjust.	√	√			
			– Change the oil.	√			√	
			– Replace the oil seal.					√
			– Clean and grease oil seals and dust covers.	√	√			√
31		Protector guide	– Replace.					√
32	*	Rear shock absorber	– Inspect and adjust.	√	√			
			– Lubricate. (After rain ride.)			√		√
			– Retighten.	√	√			

No.		Item	Checks and maintenance jobs	After break-in	Every race (about 2.5 hours)	Every third race (about 7.5 hours)	Every fifth race (about 12.5 hours)	As required
33	*	Brake(s)	– Adjust lever position and pedal height.	√	√			
			– Lubricate pivot point.	√	√			
			– Check brake disc surface.	√	√			
			– Check fluid level and leakage.	√	√			
			– Retighten brake disc bolts, caliper bolts, master cylinder bolts and union bolts.	√	√			
			– Replace pads.					√
			– Replace brake fluid.	Every one year				√
34	*	Swingarm	– Inspect, lube and retighten.	√	√			
35	*	Relay arm, connecting rod	– Inspect, lube and retighten.	√	√			
36	*	Steering head	– Inspect free play and retighten.	√	√			
			– Clean and lubricate.				√	
			– Replace bearings.					√
37	*	Tire, wheels	– Inspect air pressure, wheel runout, tire wear and spoke looseness.	√	√			
			– Retighten sprocket bolt.	√	√			
			– Inspect bearings.			√		
			– Replace bearings.					√
			– Lubricate.			√		
38	*	Drive chain	– Clean, lubricate and check for loosening/alignment.	√	√			
			– Replace.					√
39	*	Chain guide	– Check for wear.		√			
40	*	Chain guide and drive chain support.	– Replace.					√
41		Cables	– Arrangement (connection).	√	√			
			– Check and lubricate with grease.	√	√			
			– Check the throttle cables at the throttle body for dirt and wear.	√	√			
42		Levers	– Adjust the clutch lever clearance.					√
43		Brake pedal, footrest	– Lubricate.	√	√			
44	*	External nuts and bolts	– Tighten again.	√	√			
45	*	Battery	– Check the terminal for loosening and corrosion.					√

2.1 PRE-OPERATION INSPECTION AND MAINTENANCE

⚠ **Before riding for break-in operation, practice or a race, make sure the machine is in good operating condition.**

⚠ **Before using this machine, check the following points.**

Item	Routine	Page
Coolant	Check that coolant is filled up to the radiator cap. Check the cooling system for leakage.	page 110
Fuel	Check that a fresh mixture of oil and gasoline is filled in the fuel tank. Check the fuel line for leakage.	page 75
Engine oil	Check that the oil level is correct. Check the crankcase for leakage.	page 706
Gear shifter and clutch	Check that gears can be shifted correctly in order and that the clutch operates smoothly.	page 51
Throttle grip/Housing	Check that the throttle grip operation and free play are correctly adjusted. Lubricate the throttle grip and housing, if necessary.	page 92
Brakes	Check the play of front brake and effect of front and rear brake.	page 90
Drive chain	Check drive chain slack and alignment. Check that the drive chain is lubricated properly.	page 160
Wheels	Check for excessive wear and tire pressure. Check for loose spokes and have no excessive play.	page 156
Steering	Check that the handlebar can be turned smoothly and have no excessive play.	page 155
Front forks and rear shock absorber	Check that they operate smoothly and there is no oil leakage.	–
Cables (wires)	Check that the clutch and throttle cables move smoothly. Check that they are not caught when the handlebars are turned or when the front forks travel up and down.	–
Muffler	Check that the muffler is tightly mounted and has no cracks.	–
Rear wheel sprocket	Check that the rear wheel sprocket tightening bolt is not loose.	page 160
Lubrication	Check for smooth operation. Lubricate if necessary.	–
Bolts and nuts	Check the chassis and engine for loose bolts and nuts.	–
Settings	Is the machine set suitably for the condition of the racing course and weather or by taking into account the results of test runs before racing? Are inspection and maintenance completely done?	page 66

2.2 RUNNING IN

Running-in is important to allow the assembled rotating parts and sliding surfaces to combine with each other, as well as to allow the driver to become familiar with the vehicle:

- Warm up the engine and drive for about 20 minutes with a throttle valve opened by 1/2 or less;
- Stop and check: fixings, possible leakage of liquids and/or other problems;
- Then drive for another 40 minutes with a throttle valve opened by 3/4 or less;
- Stop again and check thoroughly: fixings, possible leakage of liquids and/or other problems. In-depth checks and adjustments are particularly necessary for cable paths, brake clearance, chain tensioning, spokes loosening and fixing points of the various vehicle components.

ⓘ **Repeat the procedures described each time they are replaced: piston, piston rings, valves, cylinder, crankshaft bearings. Piston, piston rings and valves: run in for 30 minutes with a throttle valve opening of 1/2 or less. Cylinder, crankshaft and bearings: run in one hour with a throttle valve opening of 1/2 or less**

ⓘ **This vehicle is equipped with an automatic engine stop system, which stops it if it is leaft idle for 7 minutes. If the engine stops, press the starter switch to restart it.**

⚠ **After the first 3 hours or 15 litres of fuel, change the engine oil and replace the engine oil filter.**

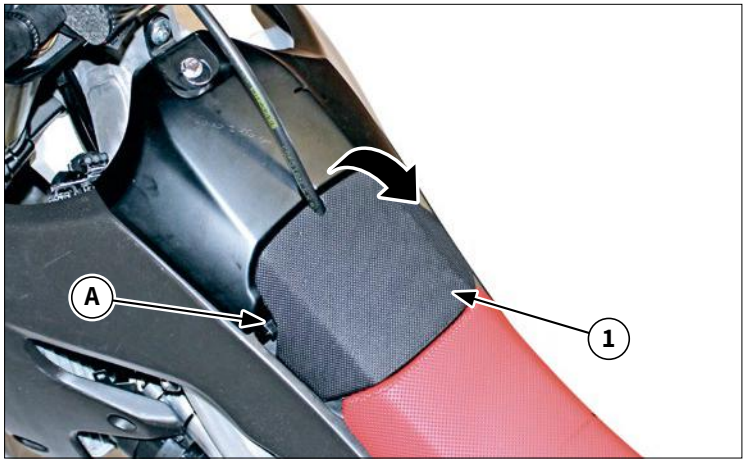

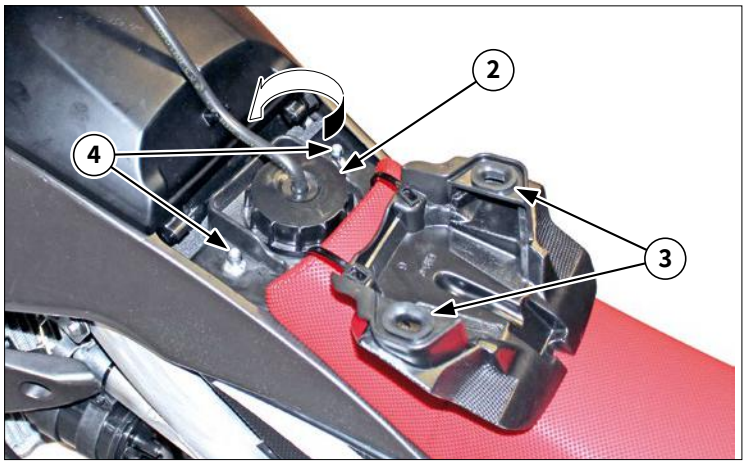

2.3 REFUELLING

(XXF 250 / XEF 250 / XEF 450 versions)

The tank cap is located underneath the initial part of the seat. To refuel, remove the initial part of the seat “1”, then unscrew the cap “2” counter-clockwise.

To remove the initial part of the seat, insert your fingers into the opening “A” and lift it towards the rear of the vehicle. When reassembling, make sure that the grommets “3” are correctly engaged in the relevant supports “4”.

⚠ **Do not smoke or use naked flames when refuelling. Avoid using electrical devices or any source that can trigger sparks or ignition. Failure to comply with these rules could result in a danger of fire or explosion, causing serious damage to property and/or persons.**

⚠ **Do not add additives or other substances to the fuel during refuelling.**

⚠ **Avoid fuel leakage during refuelling. If you use a funnel, make sure that it is perfectly clean.**

⚠ **It is recommended to use the type of fuel indicated in the technical specifications of this manual. Do not use different fuels, they could damage the fuel system and compromise the operation of the engine.**

⚠ **Make sure that the tank cap is closed.**

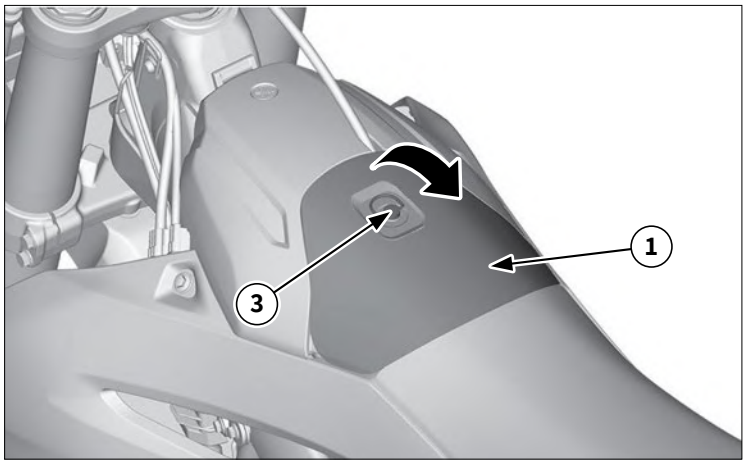

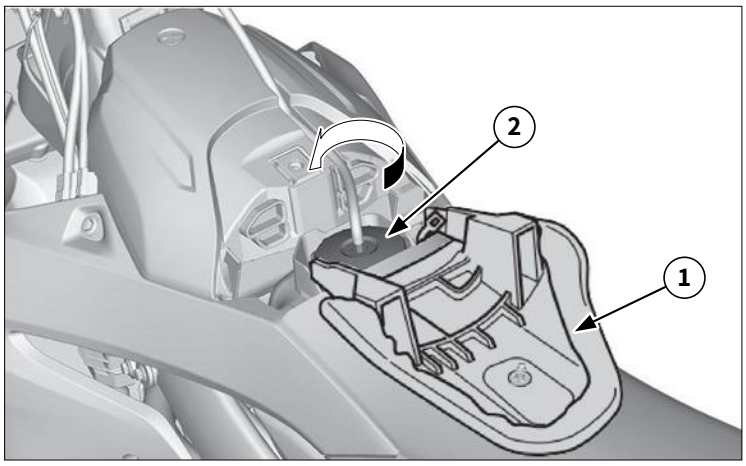

(XXF 450 version)

The tank cap is located underneath the secondary part of the seat. To refuel, remove the initial secondary part of the seat “1”, then unscrew the cap “2” counter-clockwise.

To remove the secondary part of the seat, pull the quick-release fastener “3” slightly, turn it 90°, lift it in the direction of the rear of the vehicle. During reassembly, push the quick-release fastener “3” down slightly, turn it 90° until the secondary part of the saddle is fastened.

⚠ **Do not smoke or use naked flames when refuelling. Avoid using electrical devices or any source that can trigger sparks or ignition. Failure to comply with these rules could result in a danger of fire or explosion, causing serious damage to property and/or persons.**

⚠ **Do not add additives or other substances to the fuel during refuelling.**

⚠ **Avoid fuel leakage during refuelling. If you use a funnel, make sure that it is perfectly clean.**

⚠ **It is recommended to use the type of fuel indicated in the technical specifications of this manual. Do not use different fuels, they could damage the fuel system and compromise the operation of the engine.**

⚠ **Make sure that the tank cap is closed.**

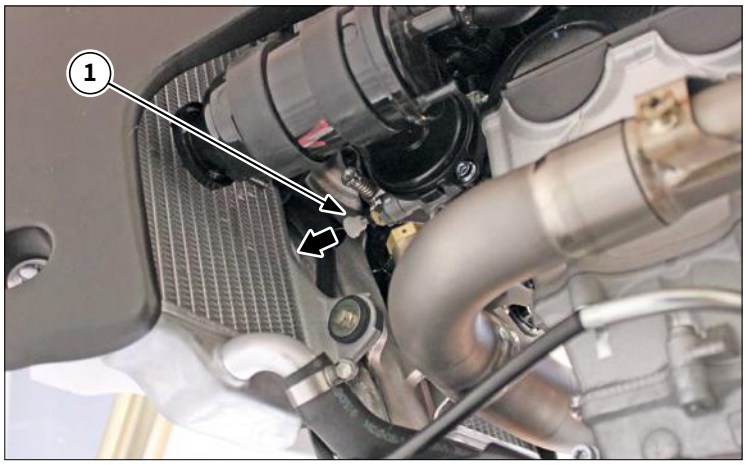

2.4 STARTING THE ENGINE

Starting a cold engine

1. Shift the transmission into neutral.
2. Press the starter knob “1” (AIR VALVE) fully down.
3. With the throttle valve fully closed, start the engine by pressing the start button “2”.
4. Run the engine at idle or slightly higher until it warms up: this usually takes about one or two minutes.
5. The engine is warmed up when it responds normally to the throttle with the starter knob (CHOKE) turned off.

⚠ **Do not warm up the engine for extended periods of time.**

Starting a warm engine

DO NOT operate the starter knob (AIR VALVE). Open the throttle valve slightly and start the engine by pressing the start button.

(XEF 250 / XEF 450 versions)
Open the throttle valve slightly and start the engine by pressing the start button “2”.

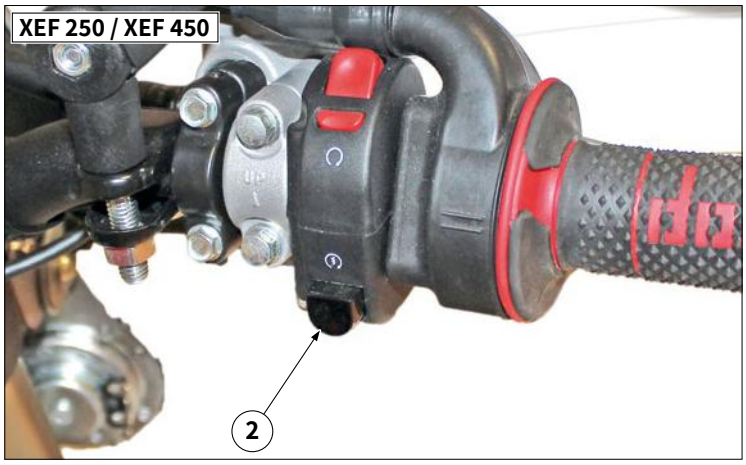

(XXF 250 version)
Open the throttle valve slightly and start the engine by pressing the start button “2”.

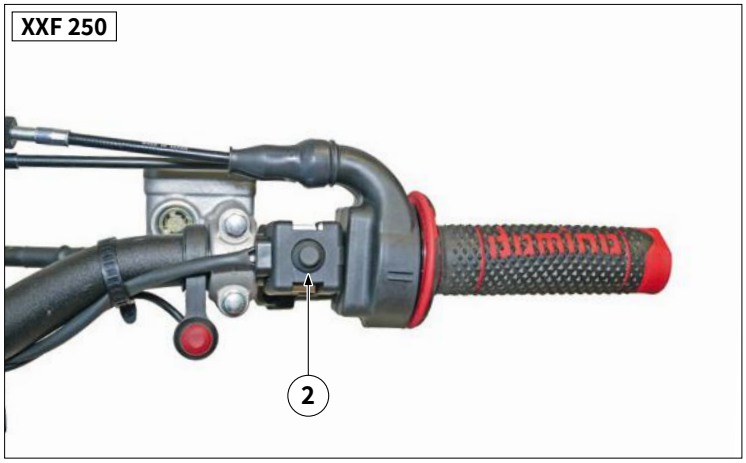

(XXF 450 version)
Open the throttle valve slightly and start the engine by pressing the start button “2”.

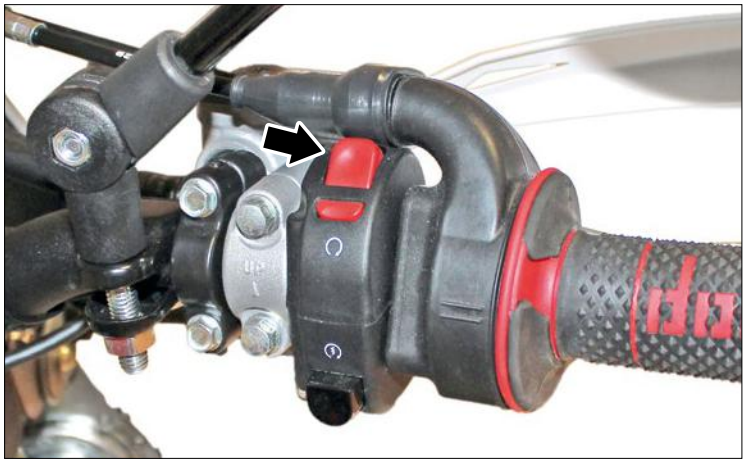

2.5 STOP THE ENGINE

(XEF 250 / XEF 450 versions)
With the throttle valve completely closed, press the “ENGINE STOP” button on the right handlebar.

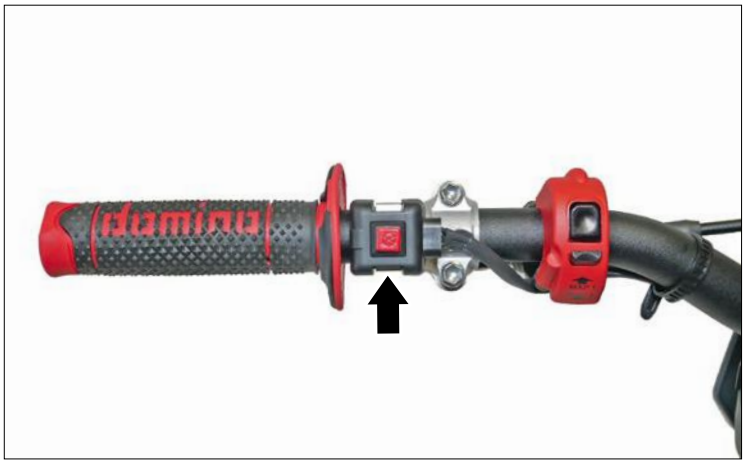

(XXF 250 version)
With the throttle valve completely closed, press the “ENGINE STOP” button on the left handlebar.

(XXF 450 version)
With the throttle valve completely closed, press the “ENGINE STOP” button on the left handlebar.

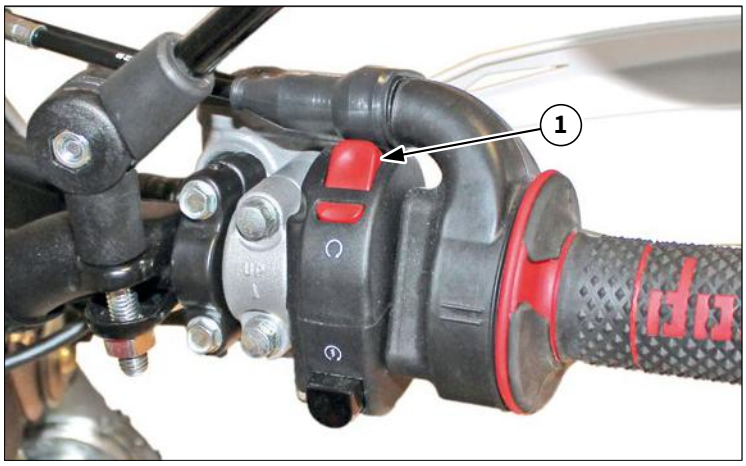

2.6 MAIN COMPONENTS

Engine stop switch
(XEF 250 / XEF 450 versions)
The engine stop switch “1” is located on the right handlebar. Press the engine stop switch until the engine stops.

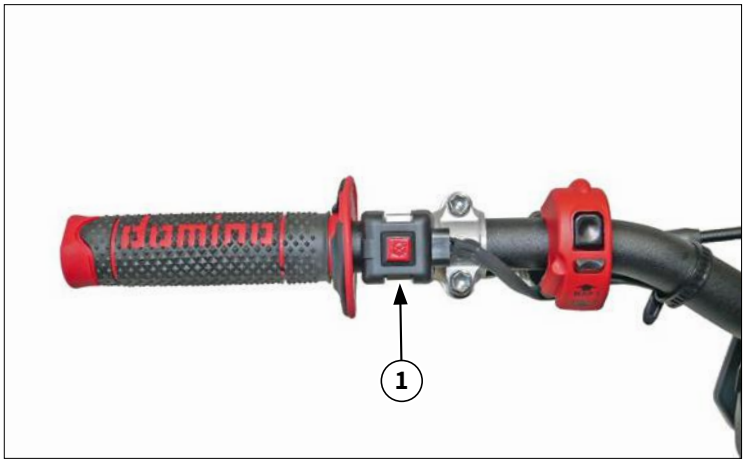

Engine stop switch (XXF 250 version)
The engine stop switch “1” is located on the left handlebar. Press the engine stop switch until the engine stops.

Engine stop switch (XXF 450 version)
The engine stop switch “1” is located on the left handlebar. Press the engine stop switch until the engine stops.

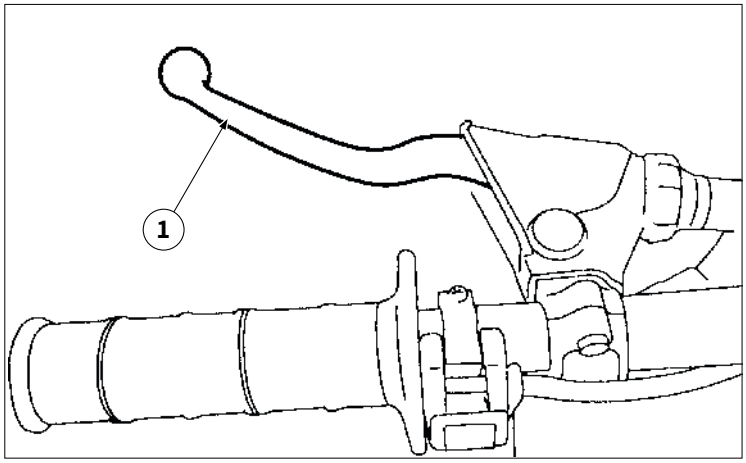

Clutch lever
The clutch lever “1” is located on the left handlebar; it disengages or engages the clutch. Pull the clutch lever to the handlebar to disengage the clutch, and release the lever to engage the clutch.

The lever should be pulled rapidly and released slowly for smooth starts.

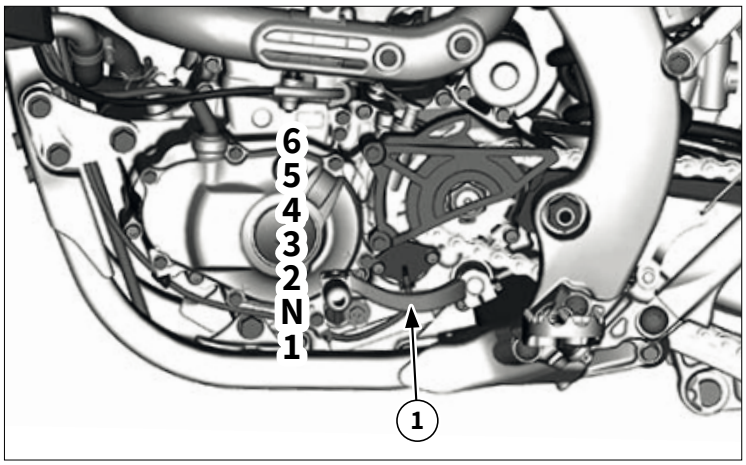

Shift pedal (XXF 250 / XEF 250 versions)

ⓘ **The gear ratios of the constant-mesh 6 speed transmission are ideally spaced.**

The gears can be shifted by using the shift pedal “1” on the left side of the engine.

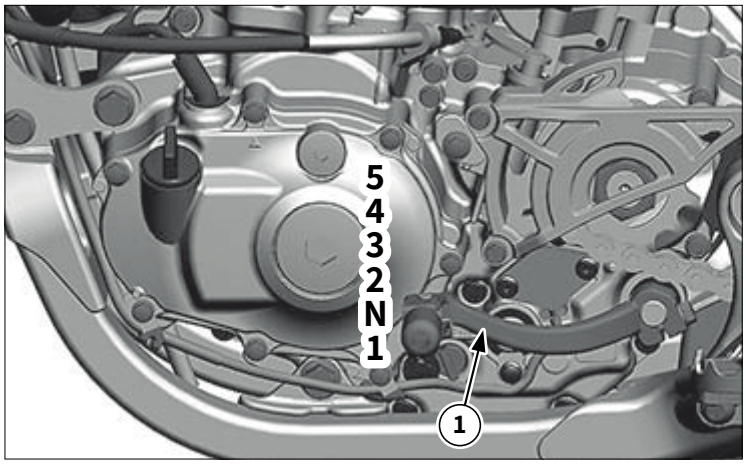

Shift pedal (XEF 450 version)

ⓘ **The gear ratios in the 5-speed gearbox are perfectly spaced.**

The gears can be shifted by using the shift pedal “1” on the left side of the engine.

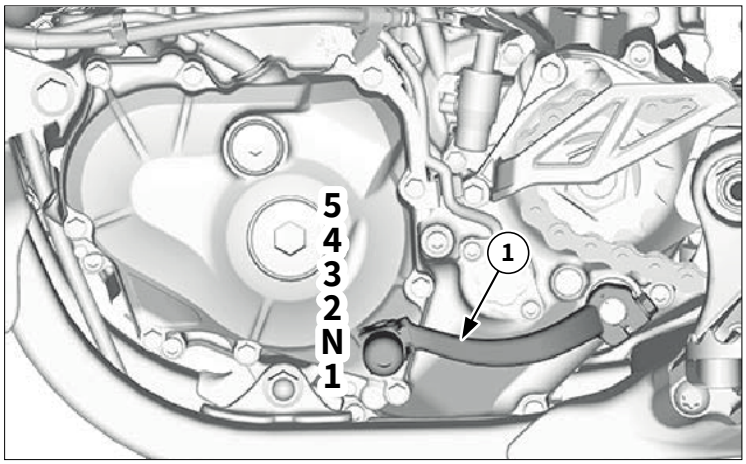

Shift pedal (XXF 450 version)

ⓘ **The gear ratios in the 5-speed gearbox are perfectly spaced.**

The gears can be shifted by using the shift pedal “1” on the left side of the engine.

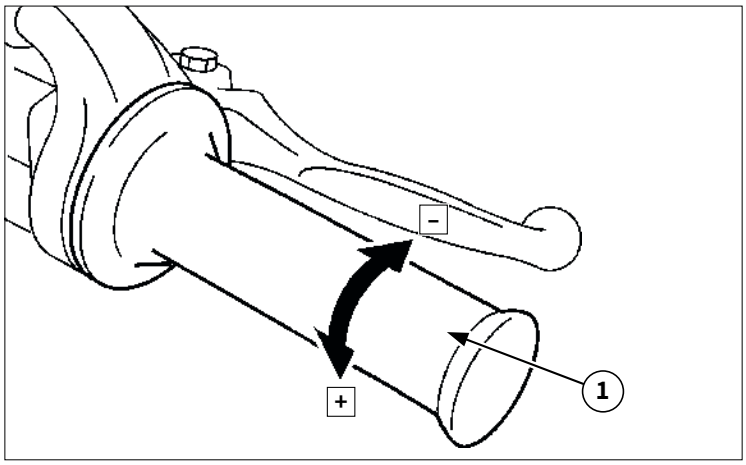

Throttle grip

The throttle grip “1” is located on the right handlebar; it accelerates or decelerates the engine. For acceleration, turn the grip toward you; for deceleration, turn it away from you.

ⓘ **“+” : accelerate**
“–” : decelerate

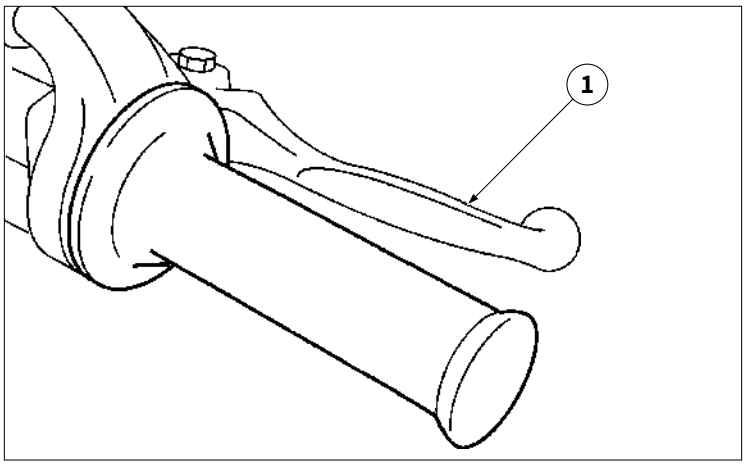

Front brake lever

The front brake lever “1” is located on the right handlebar. Pull it toward the handlebar to activate the front brake.

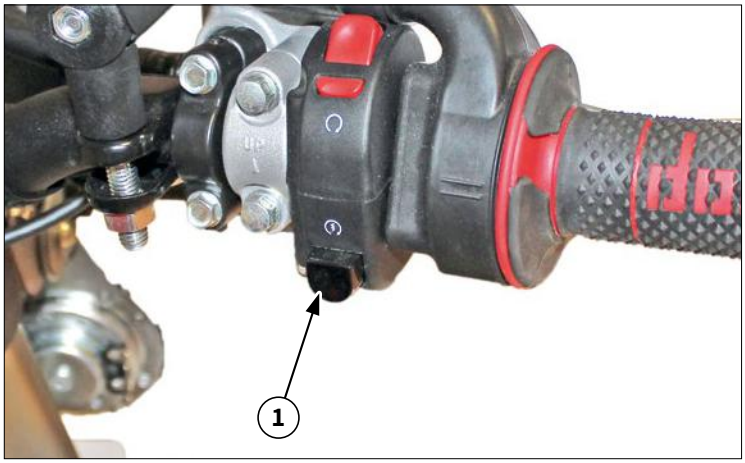

Start button (XEF 250 / XEF 450 versions)
The start button “1” is positioned on the right handlebar. Press this button to start the engine using the starter motor.

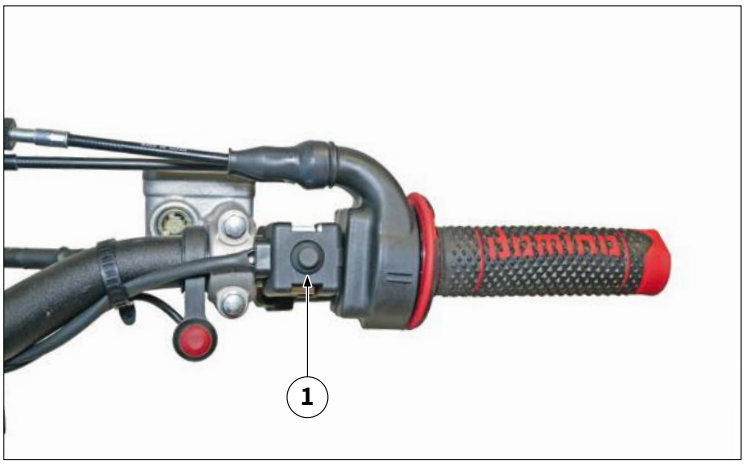

Start button (XXF 250 version)
The start button “1” is positioned on the right handlebar. Press this button to start the engine using the starter motor.

Start button (XXF 450 version)
The start button “1” is positioned on the right handlebar. Press this button to start the engine using the starter motor.

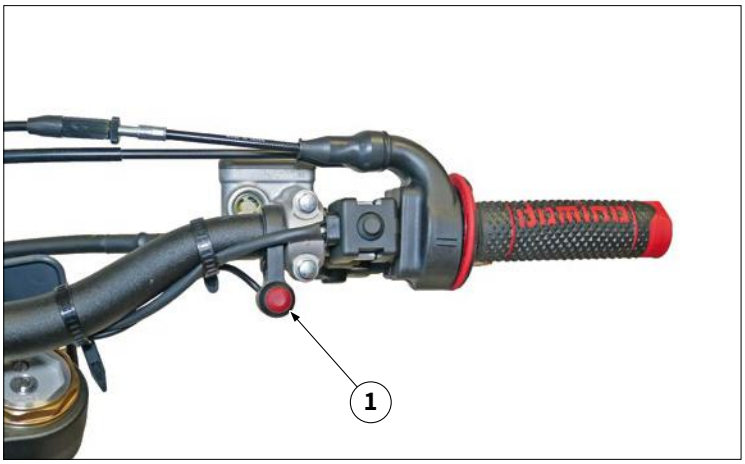

Launch/traction control system (XXF 250 version)
The launch/traction control system consists of two elements, a button and an LED screen.

Button “1” is located on the right handlebar. Using this button, it is possible to set the level of traction control and activate the launch control.

For the relevant settings, refer to section “3.11” on page 96 and section “3.12” on page 97.

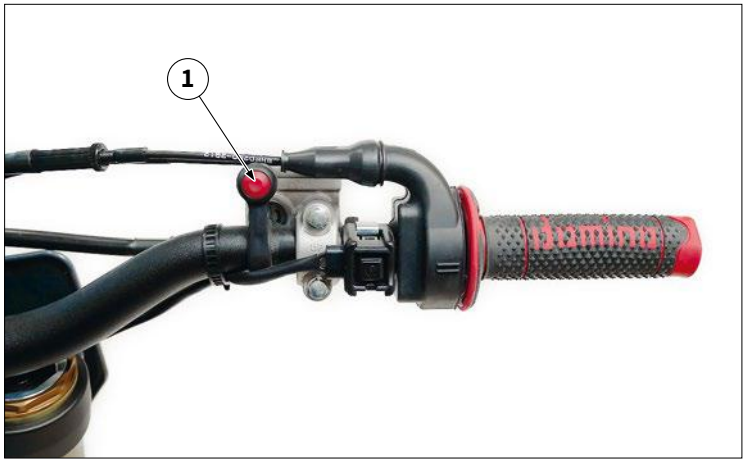

Launch/traction control system (XXF 450 version)

The launch/traction control system consists of two elements, a button and an LED screen.

Button “1” is located on the right handlebar. Using this button, it is possible to set the level of traction control and activate the launch control.

For the relevant settings, refer to section “3.11” on page 96 and section “3.12” on page 97.

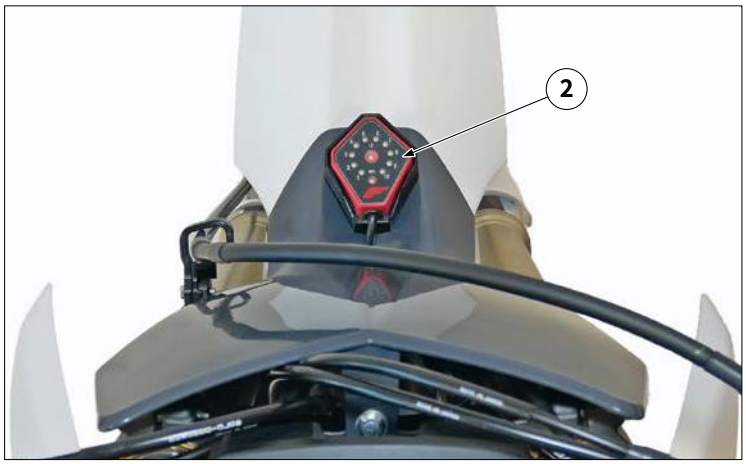

LED screen “2” is located on the front mudguard, through the screen it is possible to monitor the operation of the system and check the setting.

For the relevant settings, refer to section “3.11” on page 96and section “3.12” on page 97.

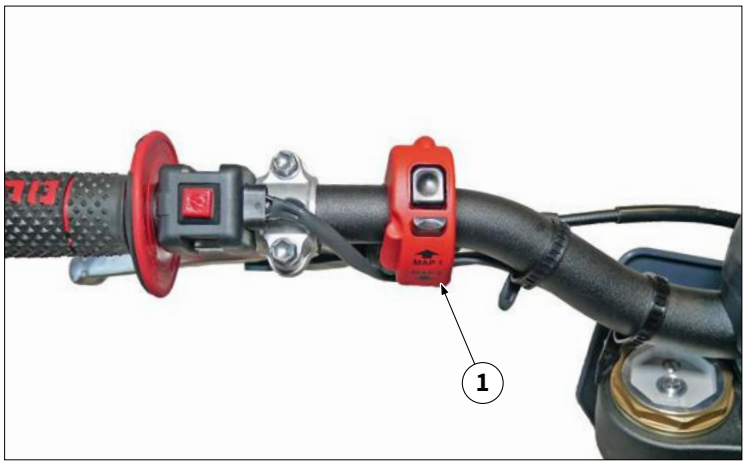

Engine mapping selection switch (XXF 250 version)

Using switch “1” on the left handlebar, it is possible to select two different engine mappings that can be set via smartphone.

ⓘ **It is possible to change the selectable mappings via the WiGet control unit app.**

ⓘ **The WiGET App can be downloaded for both Apple and Android smartphones through the relevant AppStore.**

Engine mapping selection switch (XXF 450 version)

Using switch “1” on the left handlebar, it is possible to select two different engine mappings that can be set via smartphone.

ⓘ **It is possible to change the selectable mappings via the WiGet control unit app.**

ⓘ **The WiGET App can be downloaded for both Apple and Android smartphones through the relevant AppStore.**

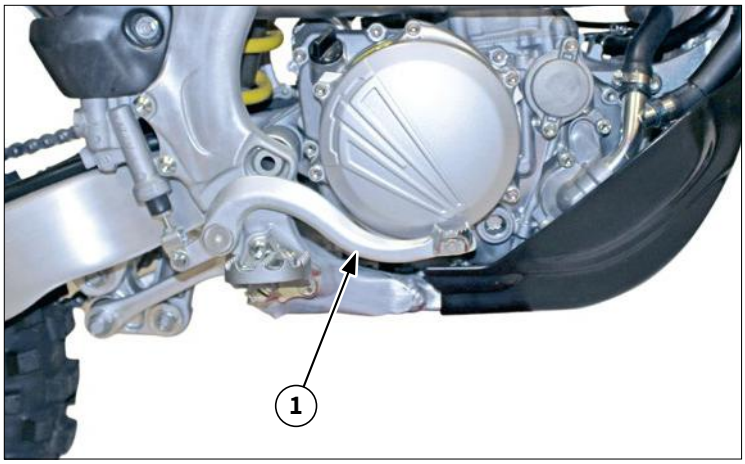

Rear brake pedal

The rear brake pedal “1” is located on the right side of the machine. Press down on the brake pedal to activate the rear brake.

Start knob (air valve)

Starting a cold engine requires more air input, which is provided by the starter knob “1”.

Pushing in the knob activates the starter, which increases the opening of the throttle valve. When the engine has warmed up, pull it out to close the circuit.

⚠ **When operating the starter knob, be careful not to burn yourself with the exhaust pipe.**

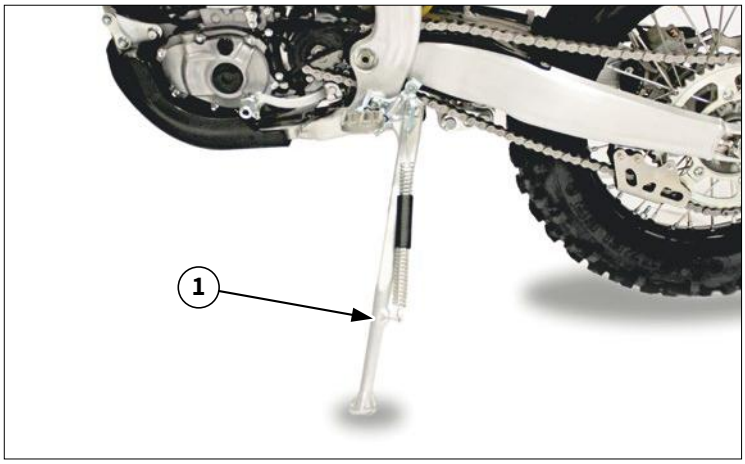

Sidestand (XEF 250 / XEF 450 versions)

This sidestand “1” is used to support only the machine when standing or transporting it.

⚠ **Never apply additional force to the sidestand.**

⚠ **Hold up the sidestand before starting out.**

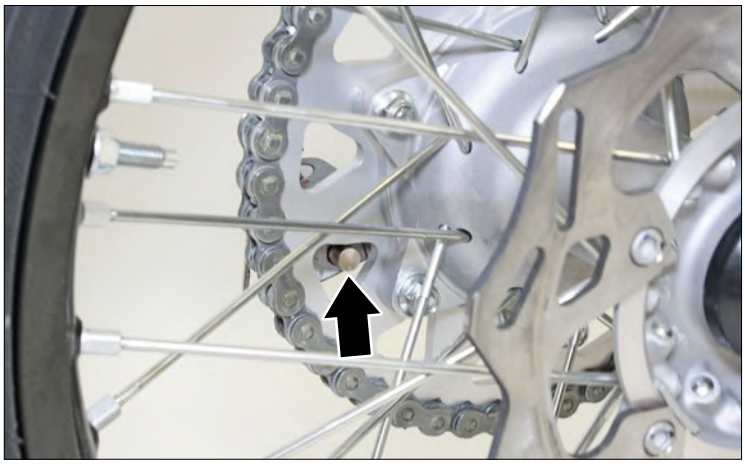

Locking device (XEF 250 / XEF 450 versions)
This device “1”, operated by the vehicle keys, allows the rotation of the rim so it can be mechanically locked.

ⓘ **It is recommended to use the device if the vehicle is left parked unattended.**

2.7 DASHBOARD (FOR XEF 250 / XEF 450 VERSIONS ONLY)

Basic functions

Registrazione di velocità massima
●Range display: 0 ~ 360 km/h (0 ~ 225 miglia)
Registrazione di RPM massimi
●Range display: 0 ~ 15.000 RPM

Tachimetro
●Range display: 0 ~ 360 km/h (0 ~ 225 miglia)

Indicatore di direzione
●Folle (spia verde)
●Indicatore di direzione destro (spia verde)
●Temperatura acqua (spia rossa)
●Olio motore (spia rossa)*
●Motore (spia gialla)
●Indicatore di direzione sinistro (spia verde)
●Carburante (spia gialla)*
●Luce abbagliante (spia blu)

Registrazione velocità media
●Range di registrazione: 0~360 km/h (0~225 MPH)

Contagiri
●Range display: 0 ~ 10.000 RPM, 0 ~ 12.000 RPM, 0 ~ 15.000 RPM

Selezionare

Regolare

Livello carburante
●Range impostazione: 100Ω、250Ω、270Ω、510Ω、1200Ω、SWITCH、USER
Avvertimento carburante basso
●Range impostazione: 10 ~ 50%, quando è inferiore (compreso) al valore di impostazione, il simbolo del livello del carburante lampeggerà.

Tempo di funzionamento totale del motore
●Range display: 0 ~ 99.999,9 ore
●Unità display: 0,1 ore
Tempo di funzionamento del motore A, B
●Range display: 0 ~ 9.999,9 ore
●Unità display: 0,1 ore

*** : Attenzione!** Le spie su questo veicolo non sono attive.

Odometro
●Range display: 0 ~ 99999,9 km (miglia) con ritorno a zero al superamento.
●Unità display: 0,1 km (miglia)

Contachilometri parziale A、B
●Range display: 0 ~ 999,9 km (miglia) con ritorno a zero al superamento.
●Unità display: 0,1 km (miglia)

Contagiri
●Range display: 0 ~ 15.000 RPM
●Unità display: 10 RPM

Voltmetro
●Range display: DC 8,0 V ~ 16,0 V
●Unità display: 0,1 V

Chilometraggio manutenzione olio motore
●Range display: Unità SI: 500 (~ 8.000 km, regolabile dall'utente) ~ -999 km, si riduce automaticamente all'aumentare del chilometraggio totale.
●Range display: Pollici: 300 (~ 5.000 km, regolabile dall'utente) ~ -999 miglia, si riduce automaticamente all'aumentare del chilometraggio totale.
●Unità display: 1 km (miglia)

ODO interno
●Range display: 0 ~ 99.999,9 km (miglia), non regolabile dall'utente.
●Unità display: 0,1 km (miglia)

ODO esterno
●Range impostazione: 0 ~ 99.999 km (miglia)
●Unita impostazione: 0,1 km (miglia)

Function, setting instructions

● Tachimetro	Range display: 0 ~ 360 km/h (0 ~ 225 mph) lampeggia quando si supera il range. Unità display: 0,1 km (miglia)
○Interno display	<0,5 secondi
○Odometro	Range display: 0 ~ 99.999,9 km (miglia) con ritorno a zero al superamento. Unità display: 0,1 km (miglia)
○Contachilometri parziale A、B	Range display: 0 ~ 999,9 km (miglia) con ritorno a zero al superamento. Unità display: 0,1 km (miglia)
●Chilometraggio manutenzione olio motore	Range display: Unità SI: 500 (~ 8000 km, regolabile dall'utente) ~ -999 km, si riduce automaticamente all'aumentare del chilometraggio totale. Range display: Pollici: 300 (~ 5000 km, regolabile dall'utente) ~ -999 miglia, si riduce automaticamente all'aumentare del chilometraggio totale. Unità display: 1 km (miglia)
○Registrazione di velocità massima	Range display: 0 ~ 360 km/h (0 ~ 225 miglia) Unità display: 1 km (miglia)
○Registrazione velocità media	Range di registrazione: 0~360 km/h (0~225 MPH)
○Circonferenza pneumatici	Range impostazione: 300 ~ 2.500 mm Unita impostazione: 1 mm
○Punto sensibile	Range impostazione: 1~20 punti Range impostazione: 1 punto
●Contagiri	Range display: 0 ~ 15.000 RPM Unità display: 10 RPM
○Interno display	<0,5 secondi
○Contagiri fase	Range display: 0 ~ 10.000 RPM、0 ~ 12.000 RPM、0 ~ 15.000 RPM Unità display: 0 ~ 10.000 RPM (333 RPM ogni fase) 0 ~ 12.000 RPM (400 RPM ogni fase) 0 ~ 15.000 RPM (500 RPM ogni fase)
○MAX registrazione RPM	Range display: 0 ~ 15.000 RPM Unità display: 10 RPM
○Impostazione numero segnale ingresso RPM	Range impostazione: P-0.5,P-1~P-25
○Impulso ingresso RPM	Range di impostazione: Lo-Act, Hi-Act

●Livello carburante	Range impostazione: 100Ω、250Ω、270Ω、510Ω、1200Ω、SWITCH、USER
○Indicatore livello carburante per fase	Range impostazione: visualizzazione a 10 fasi Range avvertenza Fase di allarme livello carburante inferiore (compreso) il valore di impostazione, il simbolo del livello carburante lampeggerà.
○Indicatore digitale del carburante	Range impostazione: 0 ~ 100% Unita impostazione: 10%
○Avvertimento carburante basso	Range impostazione: 10 ~ 50%, quando è inferiore (compreso) al valore di impostazione, il simbolo del livello del carburante lampeggerà. Unita impostazione: 10%
●Voltmetro	Range display: DC 8,0 V ~ 16,0 V Unità display: 0,1V
●ODO interno	Range display: 0 ~ 99999,9 km (miglia), non regolabile dall'utente Unità display: 0,1 km (miglia)
●ODO esterno	Range impostazione: 0~99999 km (miglia) Unità impostazione: 1 km (miglia)
●Colore retroilluminazione	Range display: bianco
●Tensione effettiva	DC 12 V
●Range temperatura effettiva	-10 ~ +60 °C
●Standard misuratore	JIS D 0203 (S2)
●Dimensioni misuratore	120 x 46 x 20 mm
●Peso misuratore	Circa 240 g
●Indicatori di direzione	Folle (spia verde) N Indicatore di direzione destro (spia verde) Temperatura acqua (spia rossa) Olio motore (spia rossa) Luce abbagliante (spia blu) Indicatore di direzione sinistro (spia verde) Carburante (spia gialla) Motore (spia gialla)

NOTA Non sarete avvisati di qualsiasi modifica di progetto e specifiche.

Meter size

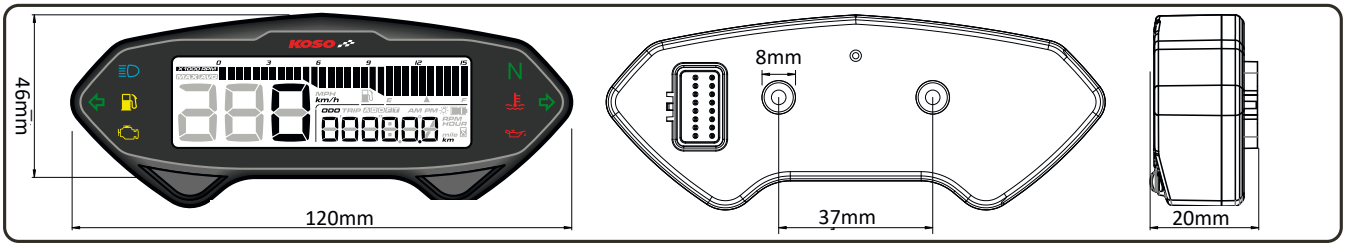

Select button function instruction

- Nel display Orologio, premere una volta il tasto **Seleziona tasto** per passare al display Voltmetro.
- In qualsiasi display, tenere premuto il **tasto Seleziona per 3 secondi** per passare da RPM a carburante.

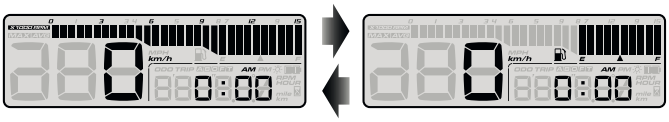

- Nel display Voltmetro, premere il **pulsante Seleziona** una sola volta per accedere al display del livello del carburante.

- Nel display del livello del carburante, premere il **pulsante Seleziona** una volta per tornare al display dell'orologio.

Adjust button function instruction

- Nel display ODO, premere il **tasto Regola** per passare al display Contachilometri parziale A.
- Nel display ODO, tenere premuti i **tasti Seleziona e Regola per 3 secondi** per entrare nelle Impostazioni (fare riferimento a 4).

- Nel display Contachilometri parziale A, premere una volta il **tasto Regola** per passare al display Contachilometri parziale B.
- Tenere premuto il **tasto Regola per 3 secondi** per resettare il display del contachilometri parziale A.

- Nel display Contachilometri parziale B, premere il **tasto Regola** una volta per attivare il display Chilometraggio manutenzione olio.
- Tenere premuto il **tasto Regola per 3 secondi** per resettare il display del contachilometri parziale B.

- Nel display Chilometraggio manutenzione olio, premere il **tasto Regola** una volta per attivare il display Ore totali.
- Tenere premuto il **tasto Regola per 3 secondi** per resettare il display del contachilometri manutenzione.

- Sul display Ore totali, premere il **tasto Regola** una volta per entrare nel display ore parziali A.

- Sul display Ore parziali A, premere il **tasto Regola** una volta per entrare nel display ore parziali B.
- Tenere premuto il **tasto Regola per 3 secondi** per resettare le ore parziali A.

- Nel display ore parziale B, premere il **tasto Regola** una volta per entrare nel display registrazione massima.
- Tenere premuto il **tasto Regola per 3 secondi** per resettare le ore parziali B.

- Nel display di registrazione massima, premere il **tasto Regola** una sola volta per accedere al display registrazione di velocità media.
- Tenere premuto il **tasto Regola per 3 secondi** per resettare la registrazione massima.

- Nel display registrazione velocità media, premere il **tasto Regola** una volta per inserire il display ODO.
- Tenere premuto il **tasto Regola per 3 secondi** per resettare la registrazione velocità media.

- Nel display ODO.

The settings screen description

●Display chilometraggio totale - Tenere premuto il **tasto Seleziona + Regola per 3 secondi** per entrare nella schermata di impostazione.
●Premere il **tasto Regola** per selezionare la schermata di impostazione per la circonferenza e il punto di rilevamento impostazione, impostazione impulsi RPM, impostazione resistenza livello carburante (impostazione manuale livello carburante / impostazione rilevamento automatico resistenza livello carburante / impostazione avvertenza carburante), impostazione della luminosità retroilluminazione, impostazione chilometraggio manutenzione olio, impostazione dell'unità di velocità, ODO esterno, ODO interno.
●In ogni display Impostazioni, tenere premuto il **tasto Seleziona per 3 secondi** per tornare al display principale.

98J A Nella schermata delle impostazioni, se il pulsante non viene premuto per 30 secondi, o la velocità > 3 chilometri all'ora, tornerà automaticamente al display principale.

98J A Dopo l'uscita dalla schermata delle impostazioni, i parametri verranno registrati.

Enter settings and function index menu

●Tenere premuto il **tasto Seleziona + Regola per 3 secondi** per entrare nella schermata delle impostazioni.

●indice funzioni
a.1 Impostazione circonferenza e punto sensibile
a.2 Impostazione impulso RPM
a.3 Impostazione resistenza livello stato carburante
a.4 Impostazione luminosità retroilluminazione
a.5 Impostazione chilometraggio manutenzione
a.6 impostazione dell'unità di velocità
a.7 ODO esterno
a.8 ODO interno

Circumference and sensing pointsetting

●Premere il **tasto Seleziona** per entrare nel display Impostazioni circonferenza e punto sensibile.

⚠ ATTENZIONE!

●Misurare la circonferenza pneumatici (lo pneumatico su cui viene installato il sensore) e controllare il numero punti sensore magnete (è possibile installare il magnete nella vite del disco o nella vite fessura).
●Il Display velocità sul tachimetro viene influenzato dall'impostazione; controllare che il numero impostazione sia corretto prima di effettuare l'impostazione.
⚠ **Resettare il valore impostazione quando si passa a pneumatici di dimensioni diverse.**

●Esempio: Se la circonferenza pneumatici è 1.300 mm.
●Premere il **tasto Seleziona** per selezionare il numero da impostare.
●Es. Ora la circonferenza pneumatici è impostata da 1.000 mm.

⚠ A questo punto la cifra per l'impostazione delle migliaia lampeggia.

98J A Range impostazione:300 ~2.500 mm
Unità impostazione:1 mm

P.S. Try it!

●È possibile definire la valvola come il punto di partenza e finale per misurare la circonferenza ruote con un metro a nastro.

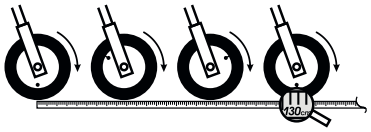

●Premere il **tasto Regola** per selezionare il numero da impostare.

●Premere il **tasto Seleziona** una per attivare il display impostazione punto sensore.
●Es. L'impostazione circonferenza viene modificata da **1.000 mm** a **1.300 mm**.

●Esempio: Se il punto sensore sta impostando 6P.
●Premere il **tasto Regola** per selezionare il numero da impostare.
●Es. Ora il punto sensore sta impostando da 1P.

⚠ Adesso il valore del numero da impostare sta lampeggiando!

98J A Punto sensibile:1 ~ 20

●Premere il **tasto Seleziona** per tornare al display d'impostazione circonferenza e punto sensibile.
●Es. Ora il punto sensore sta impostando da 1P a 6P.

●Premere il **tasto Regola** per impostare la prossima operazione.

RPM pulse setting

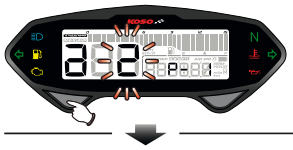

●Premere il **tasto Seleziona** una volta per entrare nella schermata di impostazione impulso RPM.

●Es. Si desidera collegare il cavo segnale RPM al segnale pick up a vi sono 13 segnali volano per volta.
●Premere il **tasto Regola** per selezionare il numero da impostare.

⚠ Ora il valore di impostazione lampeggia.

NOTA Range impostazione: 0,5, 1 ~ 25

⚠ **ATTENZIONE!** La maggior parte dei cicli motocicli a 4 cicli con un pistone singolo effettuano l'accensione ogni 360 gradi una volta, per cui l'impostazione deve essere la stessa dei motocicli a 2 cicli con motore a un pistone.

Valore d'impostazione	Corsa e numero pistone corrispondente		Numero segnale RPM corrispondente per accensione
0,5	——	4C-1P	2 segnali RPM per 1 accensione
1	2C-1P	4C-2P	1 segnale RPM per 1 accensione
2	2C-2P	4C-4P	1 segnale RPM per 2 accensioni
3	2C-3P	4C-6P	1 segnale RPM per 3 accensioni
4	2C-4P	4C-8P	1 segnale RPM per 4 accensioni
5		4C-10P	1 segnale RPM per 5 accensioni
6	2C-6P	4C-12P	1 segnale RPM per 6 accensioni

●Premere il **tasto Seleziona** per entrare nella schermata impostazioni forma d'onda.
●Es. Impostazione angolo di accensione del motore da P-1 a P-13.

●Esempio: Per impostare la forma d'onda su forma d'onda alta (Hi-Act).
●Premere il **tasto Regola** per selezionare il numero da impostare.

⚠ Ora il valore di impostazione lampeggia.

NOTA Range di impostazione: Hi-Act, Lo-Act

NOTA Durante il rilevamento del segnale RPM, se c'è qualche cattivo rilevamento o di interferenza, si prega di selezionare un'altra forma d'onda di rilevamento RPM.

●Premere il **tasto Seleziona** per entrare nella schermata di impostazione fase RPM.
●Es. Impostazione da onda alta (Hi-Act) a onda bassa (Lo-Act).

●Esempio: Per impostare il valore di fase rpm a 10.000 RPM.
●Premere il **tasto Seleziona** per selezionare il numero da impostare.
●Es. Il valore di fase rpm attuale è 15.000 RPM.

⚠ Ora il valore di impostazione lampeggia.

Range impostazione: 10.000, 12.000, 15.000 RPM

●Premere il **tasto Regola** per selezionare il numero da impostare.

●Premere il **tasto Seleziona** per tornare nella schermata di impostazione fase RPM.
●Es. Impostazione forma valore di fase rpm da 15.000 RPM a 10.000 RPM.

●Premere il **tasto Regola** per impostare la prossima operazione.

Funzioni non attive

⚠ ATTENZIONE

Tutte le funzioni relative al carburante:

Impostazione resistenza livello stato carburante
Impostazione resistenza livello stato carburante
Impostazione manuale livello carburante
Impostazione rilevamento automatico resistenza livello carburante
Impostazione avvertenza carburante

NON SONO ATTIVE!

L'unica impostazione attiva è : Range impostazione: SWITCH

Backlight brightness setting

●Premere il **tasto Seleziona** per entrare nella schermata di impostazione luminosità retroilluminazione.

●Esempio: Si desidera impostare la luminosità al 60% (3).
●Premere il **tasto Regola** per selezionare il numero da impostare.

⚠ Ora il valore di impostazione lampeggia.

NOTA Range impostazione:
1 (Più scuro) ~ 5 (Più chiaro), è possibile scegliere 5 livelli diversi.
Unità impostazione: 20% per livello.
La luminosità di retroilluminazione viene modificata immediatamente dopo l'impostazione del valore.

●Premere il **tasto Seleziona** per tornare alla schermata di impostazioni luminosità retroilluminazione.
●Es. L'impostazione luminosità di retroilluminazione è modificata da 5 (100%) a 3 (60%).

●Premere il **tasto Regola** per impostare la prossima operazione.

Oil maintenance mileage setting

● Premere il **tasto Seleziona** per entrare nella schermata di impostazione chilometraggio manutenzione olio.

●**Esempio: Per impostare il valore di chilometraggio dell'olio motore su 4T.**
●Premere il **tasto Regola** per selezionare il numero da impostare.
●Es. L'attuale chilometraggio olio motore è 2T.

⚠ Ora il valore di impostazione lampeggia.

NOTA Range impostazione: 2T / 4T.

●Premere il **tasto Seleziona** per entrare nella schermata di impostazione chilometraggio olio motore 4T.
●Es. Impostare il valore chilometraggio olio motore da 2T a 4T.

●**Esempio: Per impostare il parametro di chilometraggio dell'olio motore su 1.500.**
●Premere il **tasto Seleziona** per selezionare il numero da impostare.
●Es. Il parametro chilometraggio olio motore attuale è 1.000.

⚠ Ora il valore di impostazione lampeggia.

NOTA ●Il chilometraggio dell'olio motore a 2 tempi è indicato da un segnale di avvertimento esterno (l'indicatore dell'olio motore sarà acceso).
●Il chilometraggio dell'olio motore a 4 tempi è impostato internamente dal cronografo.

●Premere il **tasto Regola** per selezionare il numero da impostare.

●Premere il **tasto Seleziona** per tornare alla schermata di impostazione chilometraggio manutenzione olio.
●Es. Impostare il parametro chilometraggio olio motore da 1.000 a 1.500.

●Premere il **tasto Regola** per impostare la prossima operazione.

Speed unit setting

●Premere il **tasto Seleziona** per entrare nell'impostazione unità di velocità.

●Premere il **tasto Regola** per selezionare il numero da impostare.

●Premere il **tasto Seleziona** per tornare alla schermata di **impostazione unità di velocità**.
●Es. L'unità di misura velocità passa da km/h, km a MPH, miglia.

●Premere il **tasto Regola** per impostare la prossima operazione.

External ODO

●Premere il **tasto Seleziona** per attivare il display impostazione ODO esterno.

●**Esempio: Per impostare il valore totale di chilometraggio esterno su 12.500 km.**
●Premere il **tasto Seleziona** per selezionare il numero da impostare.

⚠ Ora il valore di impostazione lampeggia.

NOTA Range impostazione: 0 ~ 99.999 km (miglia)

●Premere il **tasto Regola** per selezionare il numero da impostare.

●Premere il **tasto Seleziona** sul display impostazione ODO esterno.
●Es. L'impostazione ODO esterno viene modificata da 0 a 12.500,0 km.

●Premere il **tasto Regola** per impostare la prossima operazione.

Internal ODO

●**Esempio: ODO interno attuale è su 50.000 km**.
●Premere il **tasto Seleziona** per tre secondi per tornare al display ODO.

⚠ L'utente non è in grado di regolare e cancellare le informazioni dell'ODO interno.

NOTA Range impostazione: 99999,9 km (miglia).

●Il display principale.

Trouble shooting

La situazione seguente non indica anomalia del misuratore. Controllare quanto segue prima di consegnare il dispositivo a un centro autorizzato per la riparazione.

Problema	Controllo parte	Problema	Controllo parte
Il misuratore non funziona quando viene collegato all'alimentazione.	●Il dispositivo non riceve alimentazione. →Controllare che il cablaggio sia collegato. Cablaggio e fusibili non siano rotti. →La batteria non sia rotta né sia troppo vecchia per alimentare sufficiente potenza (DC 8 V) per far funzionare il misuratore.	Il contagiri no viene visualizzato o non viene visualizzato correttamente	●Controllare che il cablaggio del sensore RPM sia collegato correttamente. ●Controllare che la candela sia di tipo R. In caso contrario, si prega di sostituire la candela con una candela di tipo R. ●Controllare l'impostazione. → Fare riferimento al manuale 4-2 impostazione degli impulsi RPM.
Il misuratore mostra informazioni errate.	**●Controllare la tensione della batteria e che la tensione sia superiore a DC 8 V.**		
La velocità non viene visualizzata oppure non viene visualizzata correttamente.	●Controllare che il sensore di velocità sia collegato correttamente. → Si prega di verificare che il sensore di velocità sia collegato e che funzioni correttamente. Verificare anche se il cavo del sensore di velocità non sia rotto o allentato o meno. ●Controllare l'impostazione delle dimensioni degli pneumatici. → Fare riferimento al manuale 4-1 Impostazioni circonferenza e punto sensibile.	Odometro e contachilometri parziale non sommano i valori o li sommano in modo errato. Il livellostato carburante non viene visualizzato o non viene visualizzato correttamente.	●È possibile che il cablaggio alimentazione permanente non sia collegato correttamente. →Controllare che il cavo positivo rosso sia collegato correttamente. ●Controllare il serbatoio del carburante. ●Controllare la matassa cavi. →Il cavo è collegato correttamente? ●Controllare l'impostazione delle dimensioni degli pneumatici. →Fare riferimento al manuale 4-3 Impostazioni resistenza livellostato del carburante.
Odometro e contachilometri parziale non sommano i valori o li sommano in modo errato.	**●È possibile che il cablaggio alimentazione permanente non sia collegato correttamente. → Controllare se il filo rosso positivo è collegato correttamente.**		

***Se il problema persiste dopo il controllo dei punti sopraindicati, contattare il distributore locale per l'assistenza.**

Dashboard setting values

Dashboard setting	Version	Standard value
Wheel circumference	–	2210
Sensitive point	–	P16
RPM pulse	–	HI-ACT
Fuel reserve	–	SWITCH
RPM number of pulses setting	–	P01

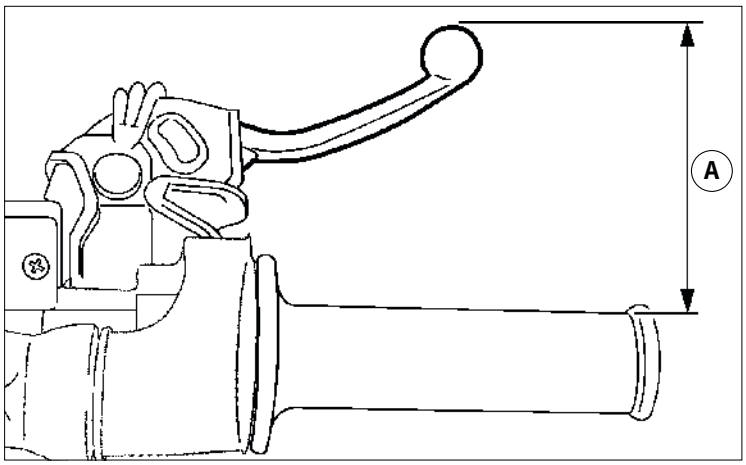

3.1 BRAKES

Front brake adjustment

Check brake lever position "A". If it is different from the standard value, adjust it.

Brake lever position "A":
Standard position: 100 mm (3.94 in)
Adjustment point: 86-105 mm (3.39-4.13 in)

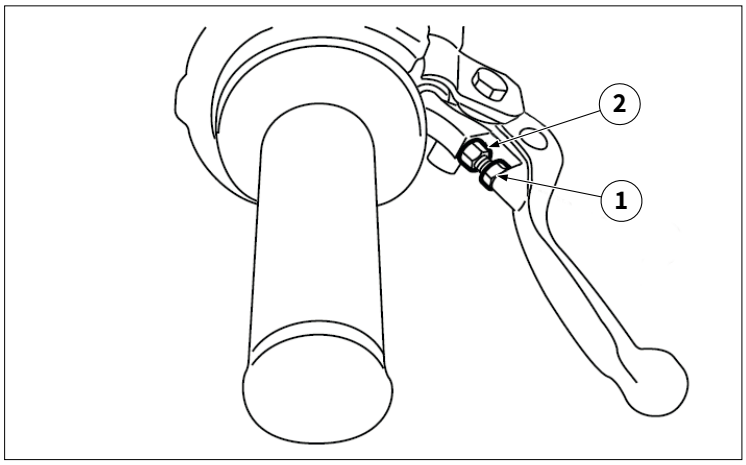

Adjust the brake lever position as described below:

- Remove the brake lever cover;
- Loosen the locknut "1";
- Turn the adjusting bolt "2" until the lever position "A" is within specified position;
- Tighten the locknut "1";
- Reinstall the brake lever cover.

Be sure to tighten the locknut, as it will cause poor brake performance.

Locknut: 5 Nm (0.5 m•kg, 3.6 ft•lb)

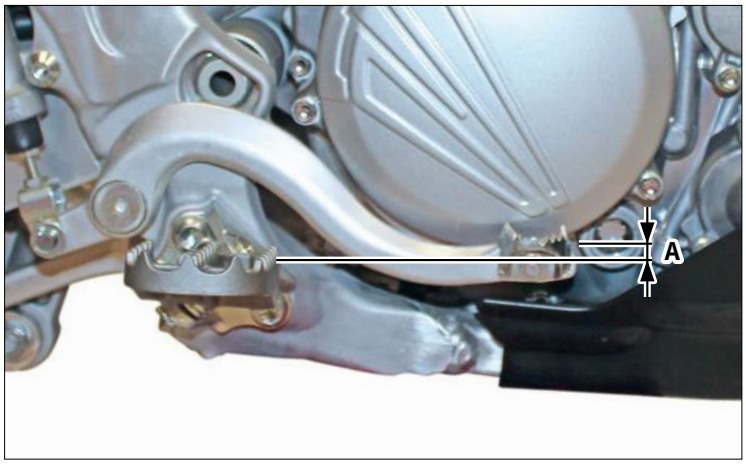

Rear brake adjustment

Check the height of brake pedal "A". If it is different from the standard value, adjust it.

Brake pedal height "A": 5.0 mm (0.20 in)

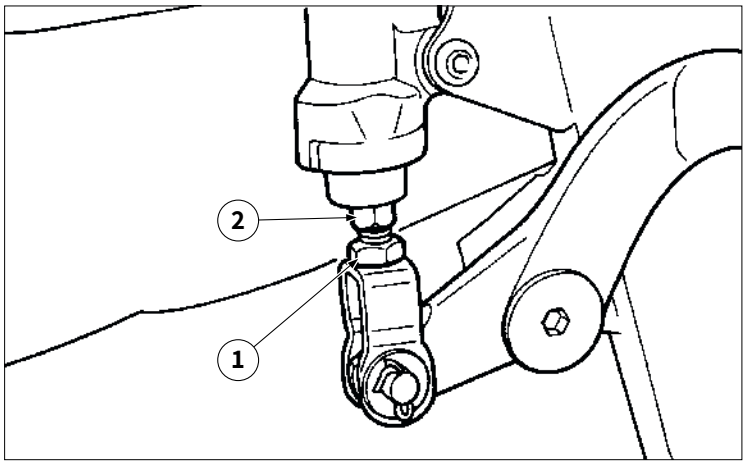

Adjust the brake pedal height as described below:

- Loosen the locknut "1";
- Turn the adjusting nut "2" until the pedal height "A" is within specified height;
- Tighten the locknut.

Locknut: 6 Nm (0.6 m•kg, 4.4 ft•lb)

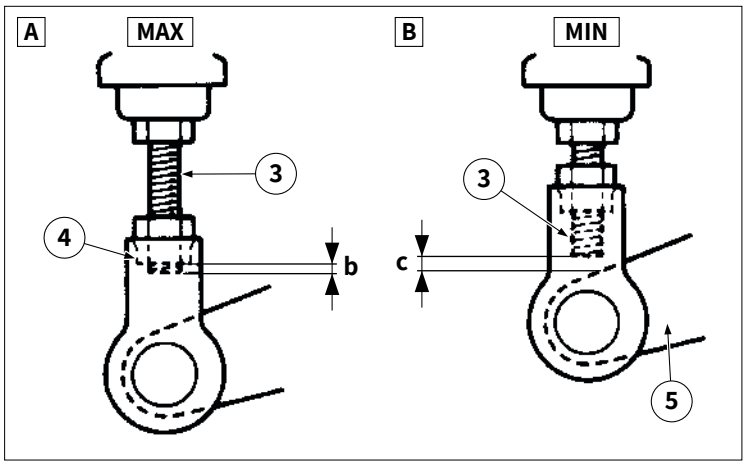

• Adjust the pedal height to a level between maximum "A" and minimum "B" as indicated. (For this adjustment, the end "3" of bolt "b" must protrude from threaded part "4", but must not be less than 2mm "c" from the brake pedal "5").
• After adjusting the pedal height, make sure that the rear brake does not creep.

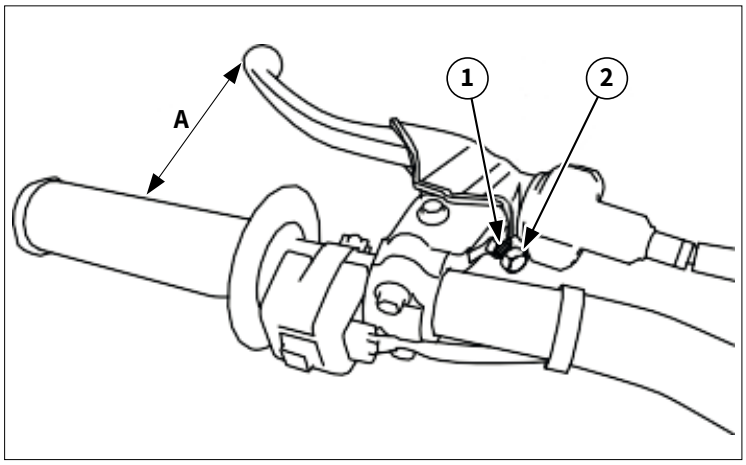

3.2 CLUTCH

Adjusting the clutch lever position

- Loosen the locknuts "1";
- Turn the adjusting bolt "2" until the clutch lever position "A" is in the desired position;
- Tighten the locknuts.

Locknut: 5 Nm (0.5 m•kg, 3.6 ft•lb)

Locknut: 4.8 Nm (0.48 m•kg, 3.5 ft•lb) (XXF 450 version)

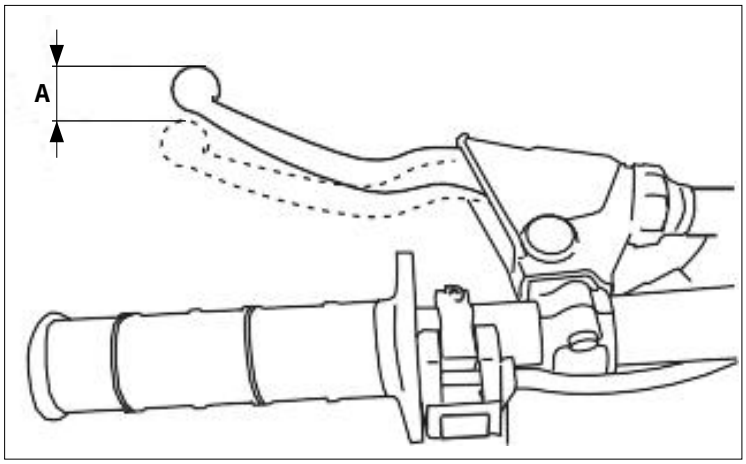

Adjusting the clutch lever clearance

Check the clutch lever clearance "A". If it is different from the standard value, adjust it.

Clutch lever clearance "A": 7.0–12.0 mm (0.28–0.47 in)

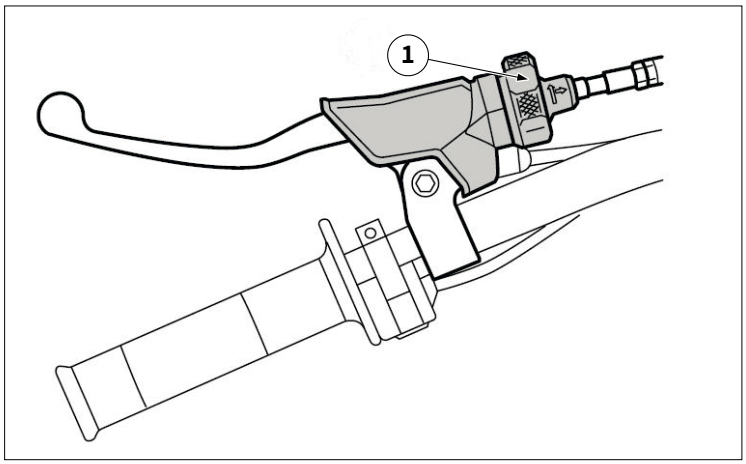

Adjust the clutch lever clearance as described below:

Handlebar side

- Turn the adjuster "1" until the specified clutch lever free play is obtained.

Turning clockwise increases the clearance, turning counter-clockwise decreases it.

If the clutch lever free play cannot be obtained on the handlebar side, use the adjuster on the clutch cable side.

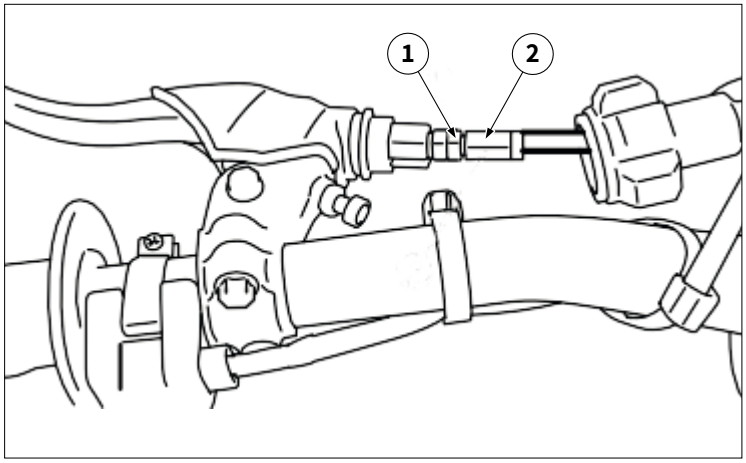

Clutch cable side
- Slide the clutch cable cover;
- Loosen the locknut “1”;
- Turn the adjuster “2” until the specified clutch lever free play is obtained;
- Tighten the locknut;

Locknut: 4.3 Nm (0.43 m•kg, 3.2 ft•lb)

- Return the clutch cable cover to its original position.

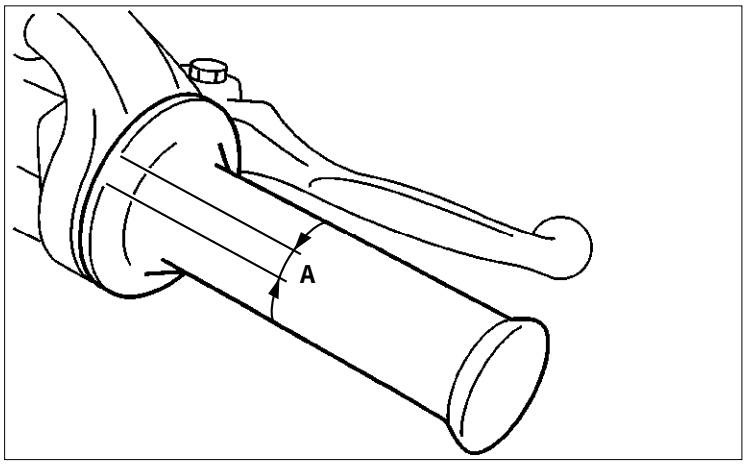

3.3 THROTTLE CONTROL

Adjusting the throttle grip clearance

Check the throttle control knob clearance “A”.

If it is different from the standard value, adjust it.

Throttle grip clearance “A”:
3.0–6.0 mm (0.12–0.24 in)

Adjust the throttle control knob clearance as described below:
- Loosen the locknut “1”;
- Turn the adjuster “2” until the specified free play is obtained;
- Tighten the locknut.

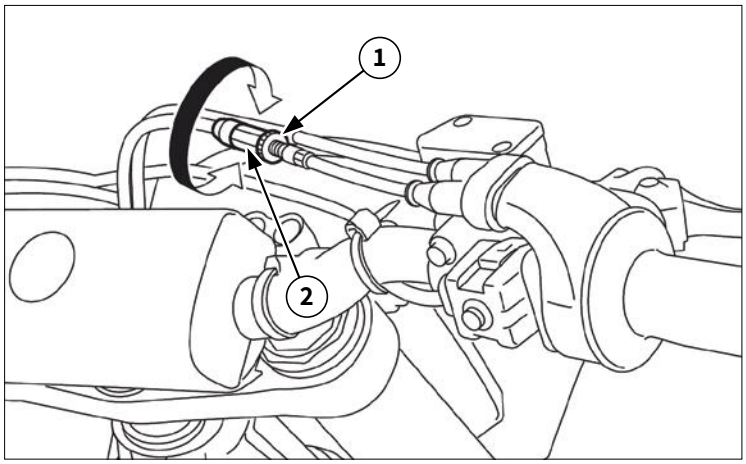

Prior to adjusting throttle grip free play, the engine idling speed should be adjusted.

Prior to adjusting throttle grip free play, the engine idling speed should be adjusted. After adjusting the throttle grip free play, turn the handlebar to the right and to the left to ensure that this does not cause the engine idling speed to change.

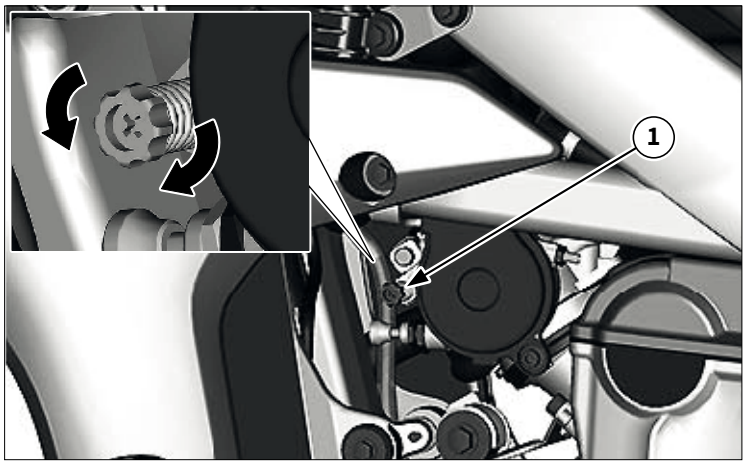

3.4 ADJUSTING THE ENGINE IDLING SPEED

- Start the engine and warm it up well;
- Install a digital tachometer on the spark plug cable;
- Adjust the idle speed by turning the adjustment screw “1” until it reaches a value that meets the specifications;

By screwing it in, the idle speed increases, by unscrewing it in, the idle speed decreases.

- Once the speed has been adjusted, remove the digital tachometer from the vehicle.

Idle speed: 1900-2100 rpm

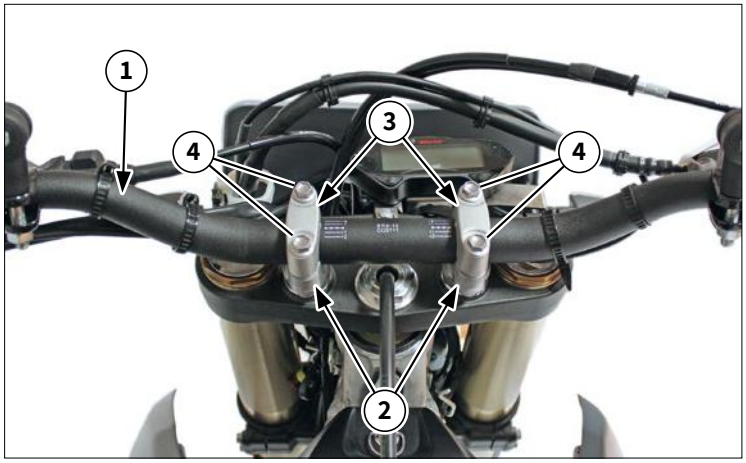

3.5 HANDLEBAR ADJUSTMENT

Handlebar installation and adjustment

Install handlebar “1” on lower supports “2”;

Install upper supports “3” and fastening bolts “4”, without tightening them definitively.

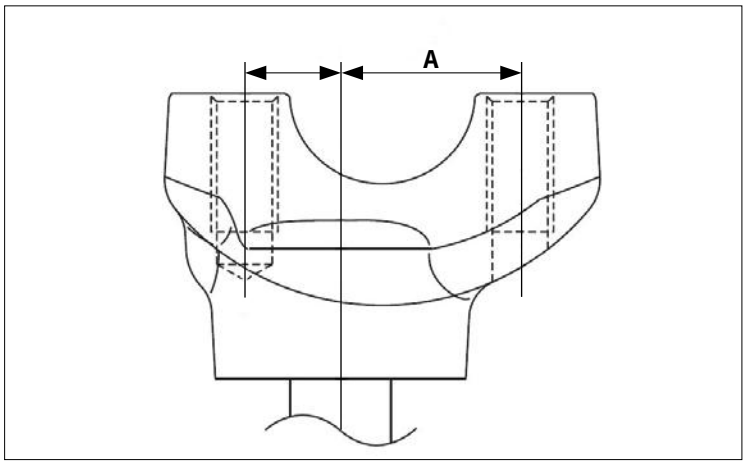

Install the lower handlebar mounts so that the side with the longest distance “a” faces forward.

By installing the lower mounts in the opposite direction, the amount of front-rear offset of the handlebar position can be changed.

Lower handlebar support nut:
40 Nm (4.0 m•kg, 30 ft•lb)

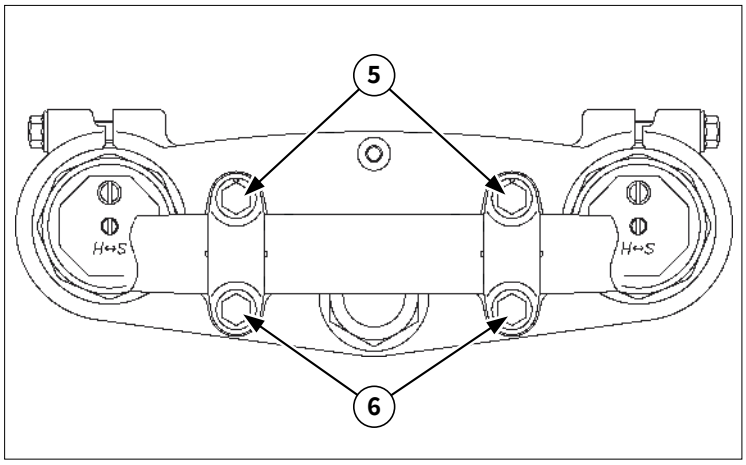

First tighten the bolts on the front side “5” of the upper handlebar holder, and then tighten the bolts “6” on the rear side.

Always install the upper handlebar mounts with the punching facing the front and the side reference notch towards the centre nut of the steering plate.

Upper handlebar support bolt:
28 Nm (2.8 m•kg, 20 ft•lb)

3.6 REAR-VIEW MIRRORS (FOR XEF 250 / XEF 450 VERSIONS ONLY)

The operations described below apply to both rearview mirrors.

- Place the vehicle on the kickstand and on a flat and stable surface.
- Loosen the lock nut “A”, turn the left-hand mirror counter-clockwise and remove it, then turn the right-hand mirror clockwise and remove it.

During reassembly, before tightening the nut, check that the mirror support rod is aligned with the handlebar.

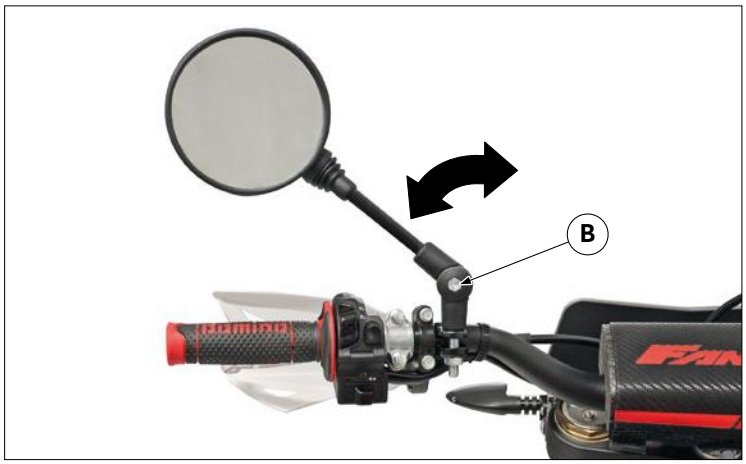

Rear-view mirror adjustment

To adjust the rear-view mirrors, get on the vehicle in the driving position and turn the rear-view mirror according to your needs. It is also possible to adjust the inclination of the rear-view mirror support rod. To carry out this operation, loosen the screw “B” and move the support rod sideways. Adjust and tighten screw “B”.

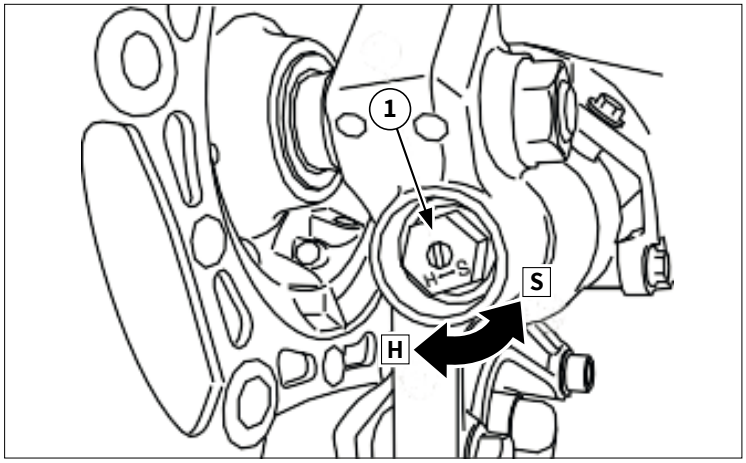

3.7 FORK ADJUSTMENT

Rebound damping adjustment (return)

- To adjust the rebound damping force of the fork, turn the adjustment device “1”. The device has a range of action of 20 clicks;
- To increase the rebound damping force (slower return) rotate the device clockwise, following the letter “H”;
- To decrease the rebound damping force (faster return) rotate the device counter-clockwise, following the letter “S”.

Standard adjustment (XXF 250):
From all closed, open by 9 clicks by turning to “S”.

Standard adjustment (XEF 250):
From all closed, open by 8 clicks by turning to “S”.

Standard adjustment (XXF 450):
From all closed, open by 10 clicks by turning to “S”.

Standard adjustment (XEF 450):
From all closed, open by 8 clicks by turning to “S”.

Do not force the adjuster past the minimum or maximum extent of adjustment. The adjuster may be damaged.

Always adjust each front fork to the same setting. Uneven adjustment can cause poor handling and loss of stability.

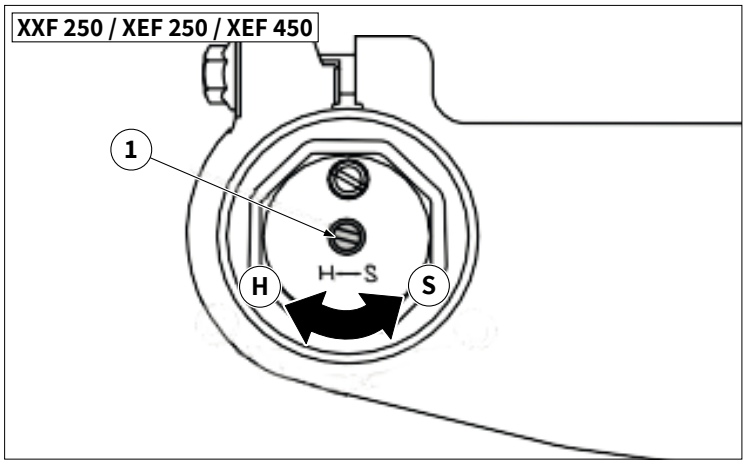

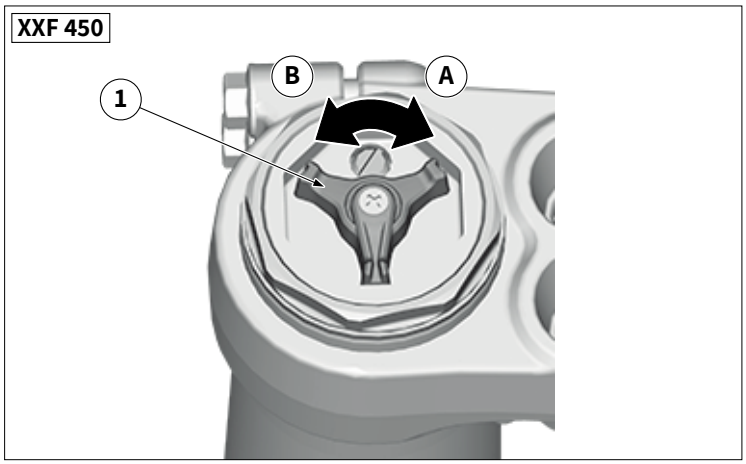

Compression damping adjustment

- To adjust the compression damping force of the fork, turn the adjustment device “1”. The device has a range of action of 20 clicks;
- To increase the compression damping force (harder thrust) rotate the device clockwise, following the letter “H”;
- To decrease the compression damping force (softer thrust) rotate the device counter-clockwise, following the letter “S”.

Standard adjustment (XXF 250):
From all closed, open by 11 clicks by turning to “S”.

Standard adjustment (XEF 250):
From all closed, open by 11 clicks by turning to “S”.

Standard adjustment (XXF 450):
From all closed, open by 11 clicks by turning to “S”.

Standard adjustment (XEF 450):
From all closed, open by 12 clicks by turning to “S”.

Do not force the adjuster past the minimum or maximum extent of adjustment. The adjuster may be damaged.

Always adjust each front fork to the same setting. Uneven adjustment can cause poor handling and loss of stability.

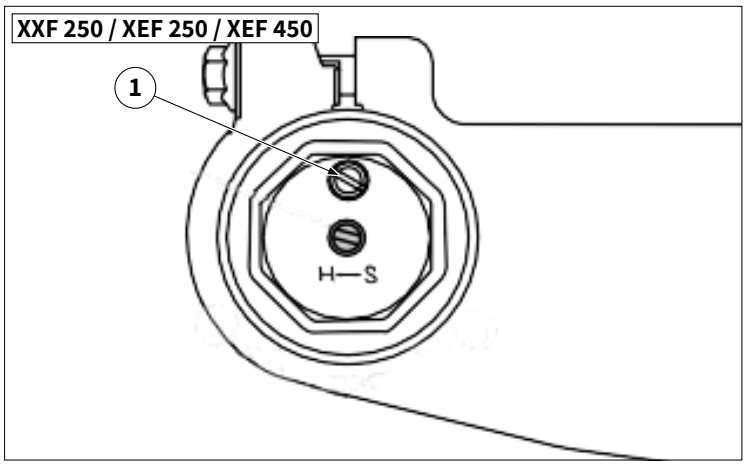

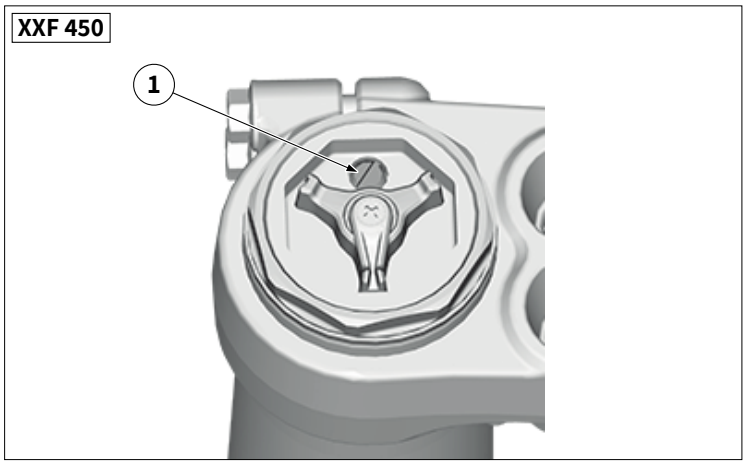

Relieving the front fork internal pressure

If the front fork initial movement feels stiff during a run, relieve the front fork internal pressure.

- Elevate the front wheel by placing a suitable stand under the engine;
- Remove the air bleed screw “1” and release the internal pressure from the front fork;
- Reinstall air purge screw “1”.

Air bleed screw: 1.3 Nm (0.13 m•kg, 0.95 ft•lb)

To improve the front fork performance, and adapt it to different road conditions, driving style and rider’s weight, Fantic features springs with different load coefficients which can be purchased from authorized dealers.

Load factor	Part number	XXF 250	XXF 450	XEF 250	XEF 450
4.1 N/mm	07154005			√	√
4.2 N/mm	07155005			√	√
4.3 N/mm	07156005			√	√
4.4 N/mm	07157005			√	√
4.5 N/mm	07148005	√	√	√	√
4.6 N/mm	07015005	√	√	√	√
4.7 N/mm	07149005	√	√	√	√
4.8 N/mm	07150005	√	√	√	√
4.9 N/mm	07151005	√	√	√	√
5.0 N/mm	07152005	√		√	√
5.1 N/mm	07153005	√	√	√	√

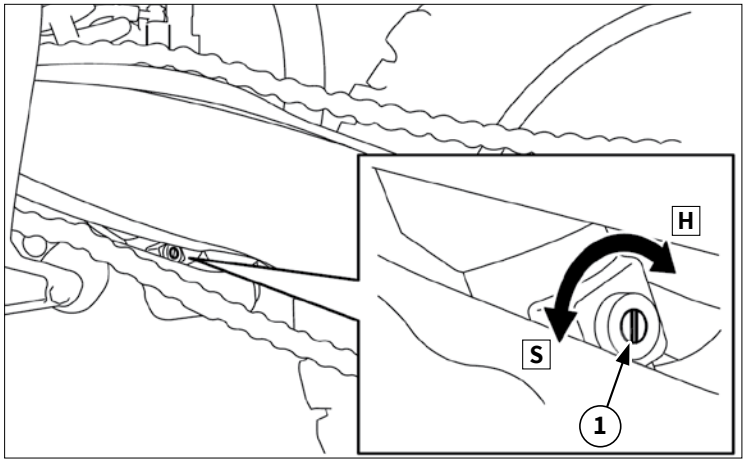

3.8 REAR SHOCK ABSORBER ADJUSTMENT

Rebound damping adjustment (return)

- To adjust the rebound damping force of the rear shock absorber, turn the adjustment device “1”. The device has a range of action of 30 clicks;
- To increase the rebound damping force (slower return) rotate the device clockwise, following the letter “H”;
- To decrease the rebound damping force (faster return) rotate the device counter-clockwise, following the letter “S”.

Standard adjustment (XXF 250):
From all closed, open by 10 clicks by turning to “S”.

Standard adjustment (XEF 250):
From all closed, open by 11 clicks by turning to “S”.

Standard adjustment (XXF 450):
From all closed, open by 13 clicks by turning to “S”.

Standard adjustment (XEF 450):
From all closed, open by 8 clicks by turning to “S”.

Do not force the adjuster past the minimum or maximum extent of adjustment. The adjuster may be damaged.

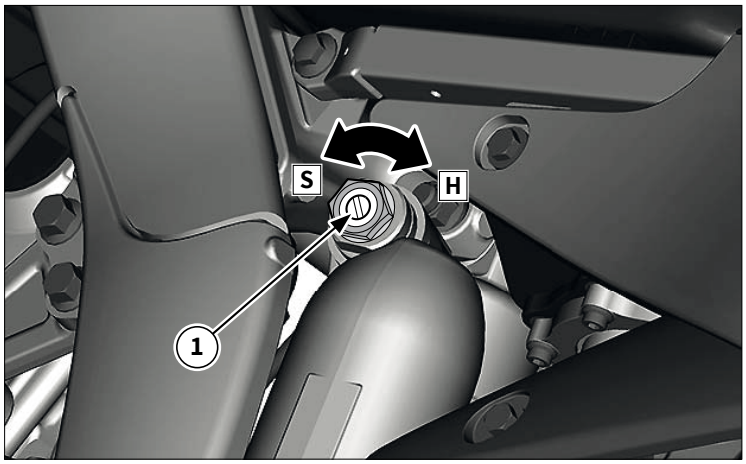

Compression damping adjustment (low speed)

- To adjust the compression damping force at low speed, turn the adjustment device “1”. The device has a range of action of 20 clicks;
- To increase the compression damping force (harder thrust) rotate the device clockwise, following the letter “H”;
- To decrease the compression damping force (softer thrust) rotate the device counter-clockwise, following the letter “S”.

Standard adjustment (XXF 250):
From all closed, open by 10 clicks by turning to “S”.

Standard adjustment (XEF 250):
From all closed, open by 8 clicks by turning to “S”.

Standard adjustment (XXF 450):
From all closed, open by 10 clicks by turning to “S”.

Standard adjustment (XEF 450):
From all closed, open by 10 clicks by turning to “S”.

Do not force the adjuster past the minimum or maximum extent of adjustment. The adjuster may be damaged.

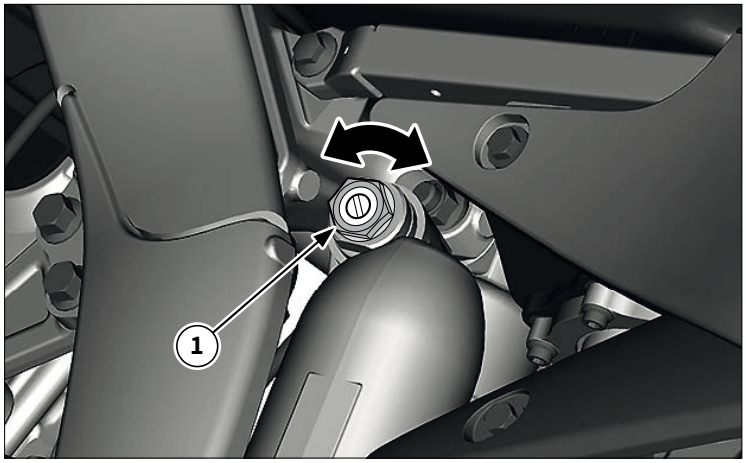

Compression damping adjustment (high speed)

- To adjust the compression damping force at high speed, turn the adjustment device "1". The device has a range of action of 2 turns, from fully closed, rotating counter-clockwise;
- To increase the compression damping force (harder thrust) rotate the device clockwise;
- To decrease the compression damping force (softer thrust) rotate the device counter-clockwise.

Standard adjustment (XXF 250):
When fully closed, unscrew the adjuster by 1 turn.

Standard adjustment (XEF 250):
When fully closed, unscrew the adjuster by 1 turn.

Standard adjustment (XXF 450):
When fully closed, unscrew the adjuster by 1 turn.

Standard adjustment (XEF 450):
When fully closed, unscrew the adjuster by 1 turn.

Do not force the adjuster past the minimum or maximum extent of adjustment. The adjuster may be damaged.

3.9 SETTING THE SAG

Rear shock absorber sinking adjustment (SAG)

- Place a stand or block under the engine to put the rear wheel above the floor, and measure the length "A" between the rear wheel axle center and the rear fender holding bolt;

- Remove the kickstand or retainer from the engine and, WITHOUT the driver on the vehicle, measure the sinking "B" between the centre of the rear wheel axle and the rear mudguard locking bolt.

Standard value: 15-40mm

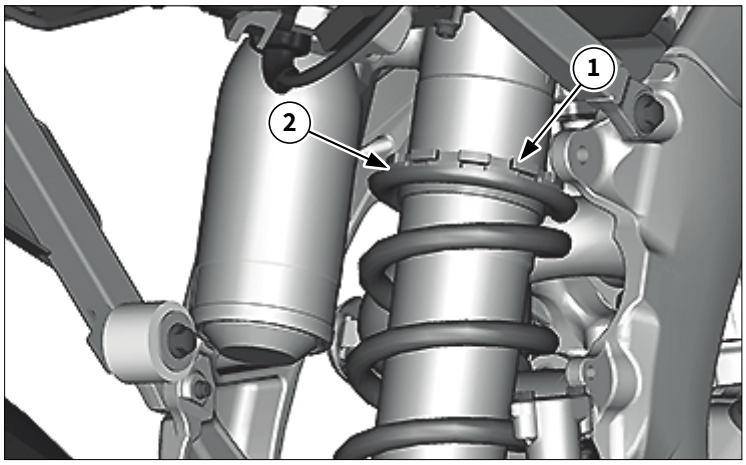

- With the vehicle on the ground, hold it and get the driver on board, making sure he/she is wearing all the protective clothing available. Then measure the sinking "C" between the centre of the rear wheel axle and the rear mudguard locking bolt.

Standard value: 90-100mm (3.5-3.9 in)

- If the measured value is not included within the standard range, adjust it by loosening locknut "1". Now turn the ring nut "2" of the spring, screwing it in to give more preload (less thrust) and unscrewing it to give less preload (more thrust);
- Repeat the measurement and adjustment operations until the standard value is reached. Once reached, tighten the locknut "1".

Before adjusting, make sure to remove all mud and dirt around the ring nut and lock nut.

If the vehicle is new and has run-in, the same spring length set may vary due to initial spring fatigue. Therefore be sure to perform a new evaluation.

In case it is not possible to reach the standard value through ring nut adjustment, replace the shock absorber spring with a spring having a different load coefficient. If the ring nut is in the highest position (lower preload) but the sag value is lower than the standard value, choose a spring with a lower coefficient. Conversely, if the spring is in the lowest position but the sag value is higher than the standard value, choose a spring with a higher coefficient.

To improve the rear shock absorber performance, and adapt it to different road conditions, riding style and rider's weight, Fantic features springs with different load coefficients that can be purchased from authorized dealers.

Load factor	Part number	XXF 250	XXF 450	XEF 250	XEF 450
48 N/mm	**07147005**	√	√	√	√
50 N/mm	**07146005**	√	√	√	√
52 N/mm	**07141005**	√	√	√	√
54 N/mm	**07142005**	√	√	√	√
56 N/mm	**07143005**	√	√	√	√
58 N/mm	**07144005**	√	√	√	√
60 N/mm	**07145005**	√	√	√	√

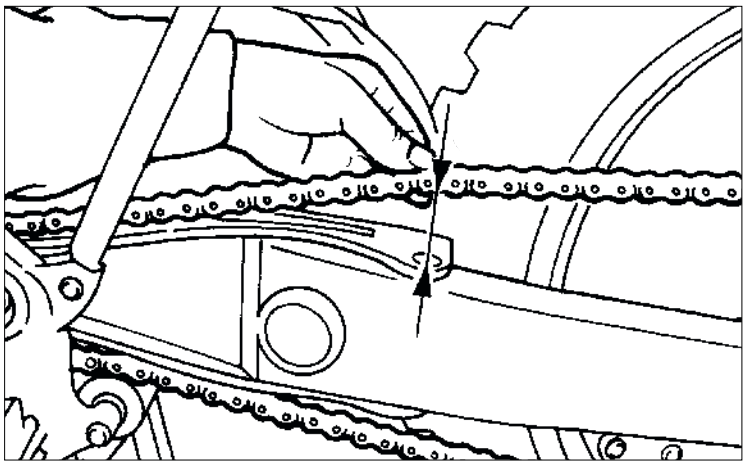

3.10 CHAIN TENSION

If the drive chain is too tight, it will overload the engine and other vital parts, and if it is too loose it may jump and damage the swingarm or cause an accident. Therefore it is recommended to keep the chain tension within the specified limits.

Chain tension check

- Place a kickstand or stand under the engine to raise the rear wheel off the floor;
- Place the gearshift in neutral;
- Lift the drive chain off the swingarm, close to the chain guide fixing bolt;
- Measure the tension between the guide and the bottom of the chain, as shown in the figure;

Transmission chain tension:
50.0 - 60.0mm (1.97 - 2.36 in)

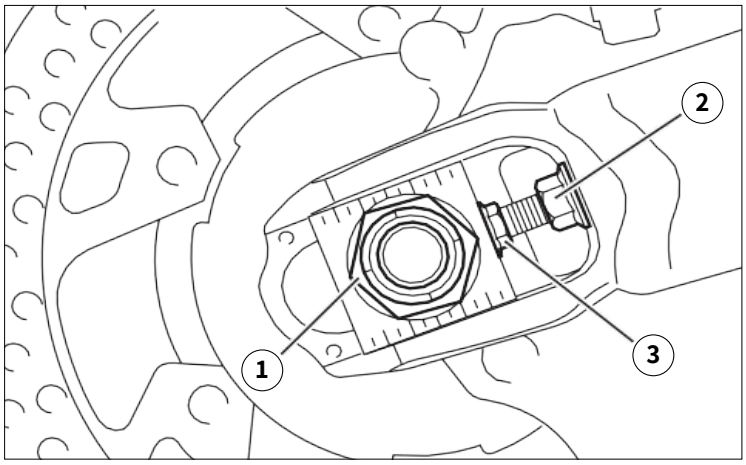

Chain tension adjustment

- Place a kickstand or a stand under the engine to raise the rear wheel off the floor;
- Place the gearshift in neutral;
- Loosen the wheel axle nut “1”,
- Loosen the locknut “2” on both sides;
- Turn the adjusting bolt “3”, on both sides, until the specified chain tension is achieved;

To maintain the correct alignment of the rear wheel, carry out the adjustment by acting evenly on both adjusters.

- Once the correct tension is achieved, tighten the rear wheel axle nut to the specified torque;
- Tighten the locknuts of the drive chain adjusters.

While tightening the wheel axle nut, push the wheel forward to ensure that there is no clearance between the adjusters and the wheel axle plates.

Rear wheel axle nut (XXF 250 / XXF 450):
135 Nm (13.5 m•kg, 100 ft•lb)

Rear wheel axle nut (XEF 250 / XEF 450):
125 Nm (12.5 m•kg, 92 ft•lb)

Chain adjusters locknut:
21 Nm (2.1 m•kg, 15 ft•lb)

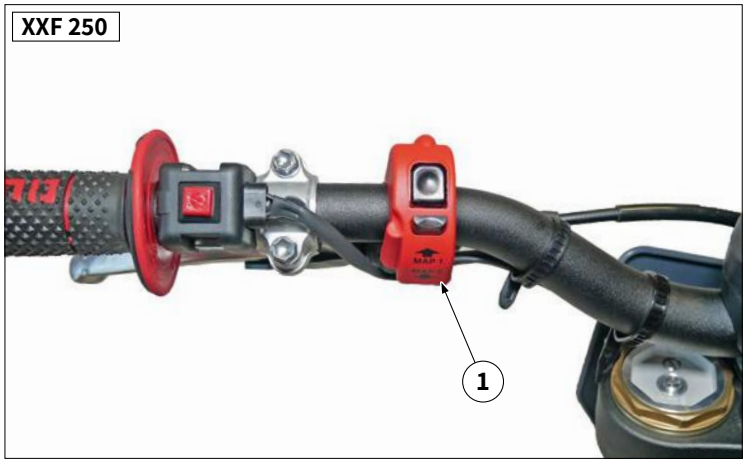

3.11 ENGINE MAPPINGS (XXF 250 / XXF 450 VERSIONS)

- The vehicle's ECU is supplied with 3 different engine mappings inside, which can be selected using the special WiGet app. Through the app, it is also possible to modify the parameters and create new ones.
- By means of Switch "1" on the left handlebar, it is possible to select two different mappings while using the vehicle, in order to better adapt to the driving conditions. The mappings selectable using the Switch can be set using the WiGet app.

The WiGET App can be downloaded for both Apple and Android smartphones through the relevant AppStore.

To connect to the ECU and change its parameters, refer to the instructions inside the App.

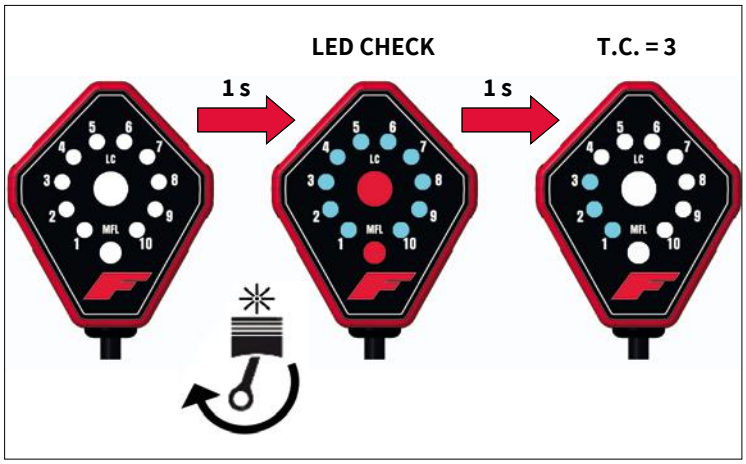

3.12 TRACTION CONTROL MODE (XXF 250 / XXF 450 VERSIONS)

- Approximately 1 second after starting the engine, all LEDs will light up (LED CHECK);
- After approximately one second from the LED CHECK, only the LEDs indicating the current T.C. level will remain lit.

In figure T.C. = 3

If T.C. = 0 no LED will light up

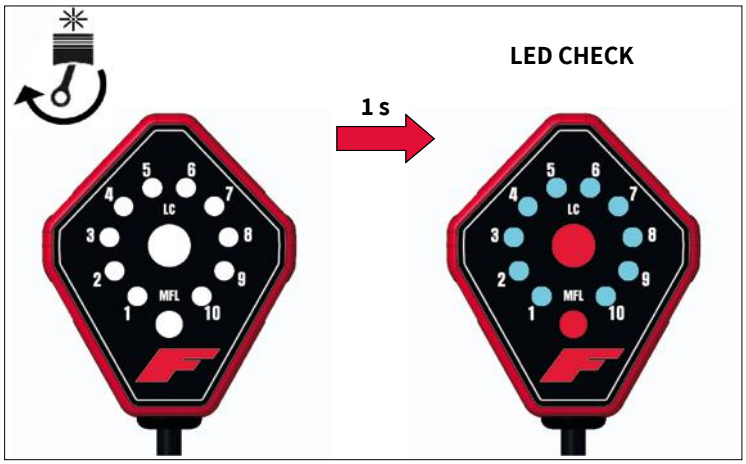

TRACTION CONTROL level setting

It is possible to ACTIVATE the LAUNCH CONTROL only under 8.000 rpm and with the throttle valve open at maximum 10%.

- Start the engine and wait for the LEDs to perform the initial CHECK;

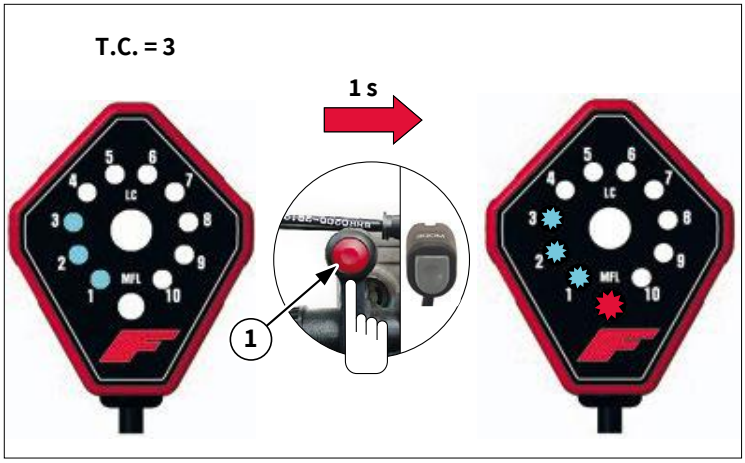

- After the CHECK, the LEDs indicating the current C.T. level will remain lit;
- Press and hold button “1” for at least 1 second;
- The LEDs will start to flash, it is now possible to set the desired T.C. level;
- Release button “1”;

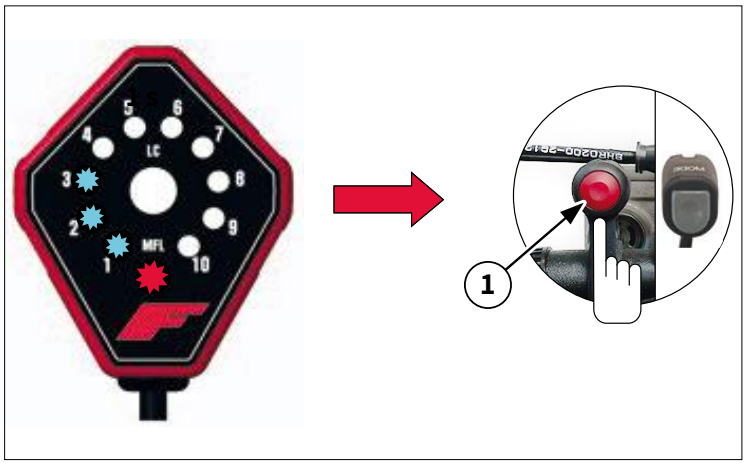

- Then briefly press the “1” button to set the desired T.C. level;

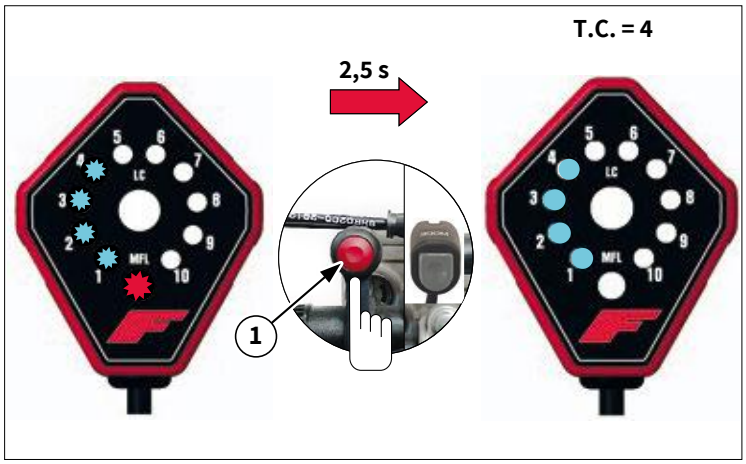

- Once the desired T.C. level has been reached, release button “1” and DO NOT press it for at least 2.5 seconds.
- The T.C. is now set.

ⓘ **In this mode, the lit MFL LED indicates a zero C.T. level.**

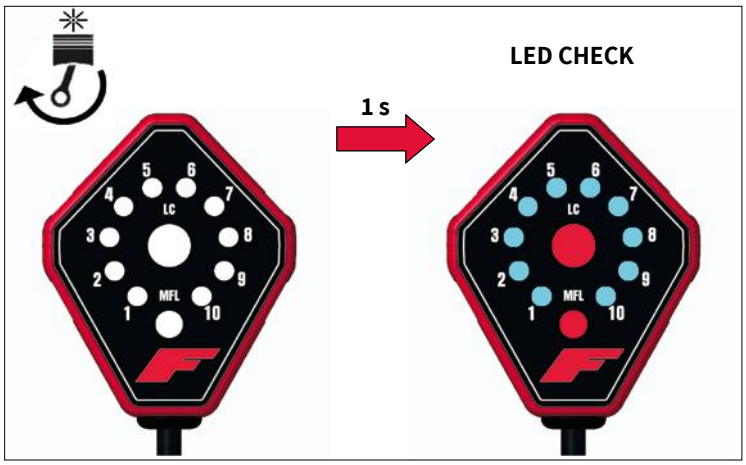

3.13 LAUNCH CONTROL MODE (XXF 250 / XXF 450 VERSIONS)

Activation of LAUNCH CONTROL

ⓘ **It is possible to ACTIVATE the LAUNCH CONTROL only under 8,000 rpm and with the throttle valve open by a maximum of 10%.**

- Start the engine and wait for the LEDs to perform the initial CHECK;

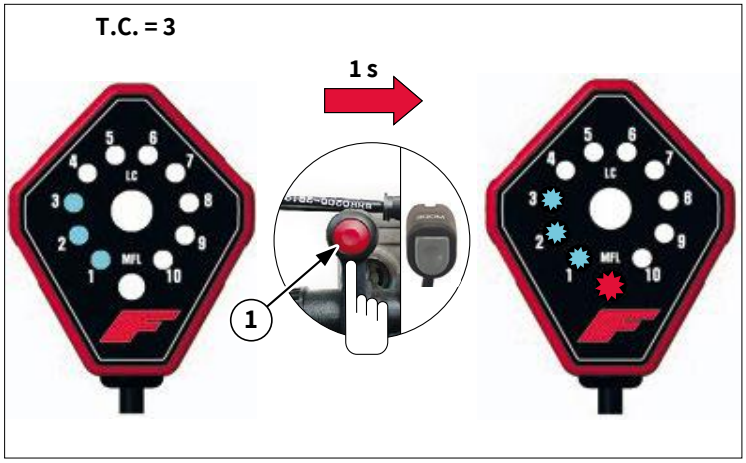

– After the CHECK, the LEDs indicating the current T.C. level will remain lit;
– Keep button “1” pressed until the LEDs begin to flash (at least 1 second);

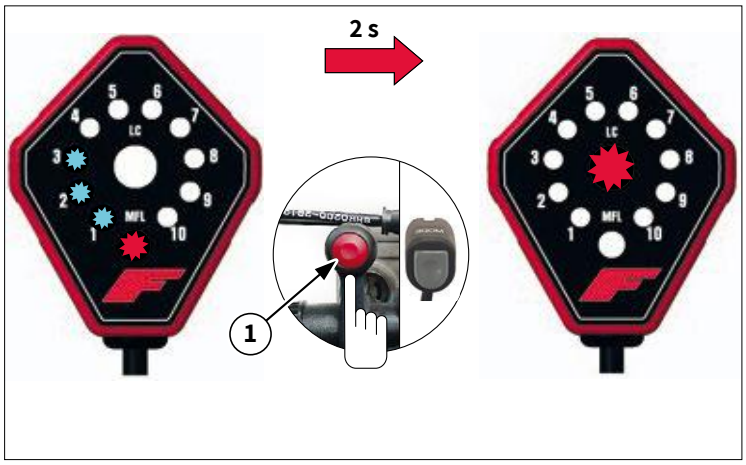

– With the LEDs flashing, continue to press button “1” until only the LC LED flashes (at least a further 2 seconds);
– Release button ‘1’;

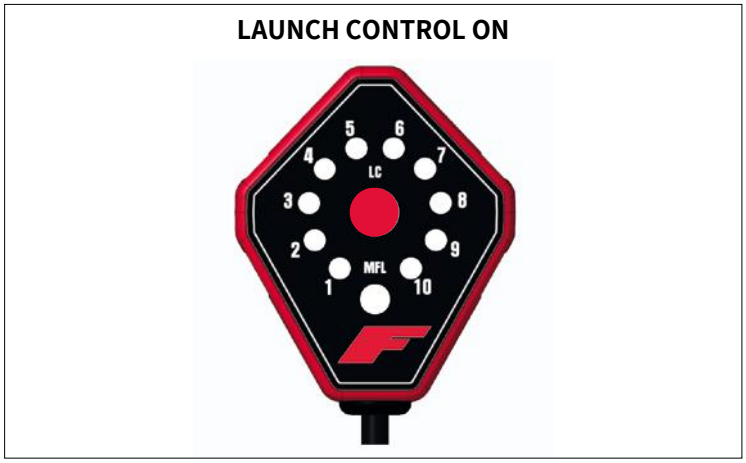

– The LAUNCH CONTROL is active if the LC LED remains lit continuously.

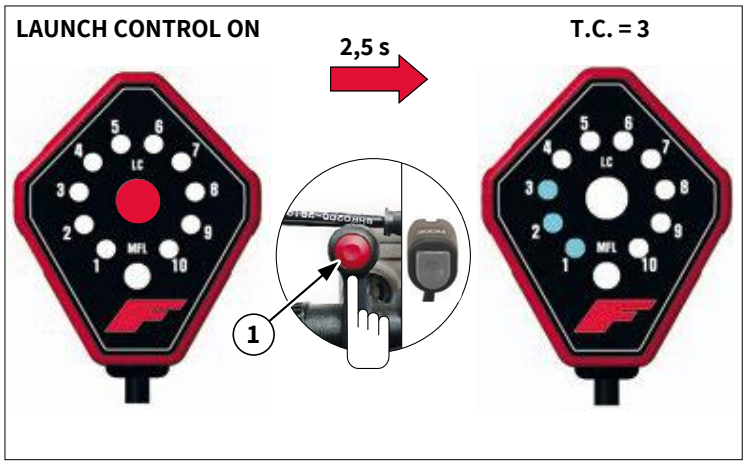

ⓘ **To voluntarily deactivate the LAUNCH CONTROL, press button “1” for at least 2.5 seconds and then release it. The LAUNCH CONTROL will be deactivated and the previously set TRACTION CONTROL will remain active.**

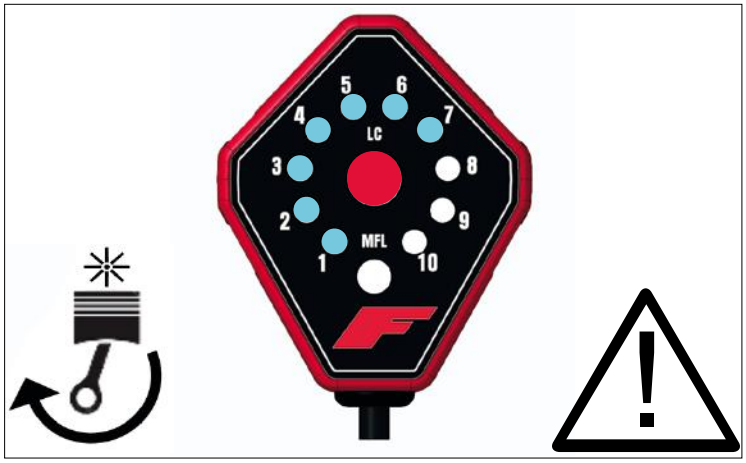

LAUNCH CONTROL operation

- Once the LAUNCH CONTROL is activated, the following signals can be displayed:
- **ENGINE RPM TOO LOW**: all LEDs are not lit, accelerate for optimal starting speed;

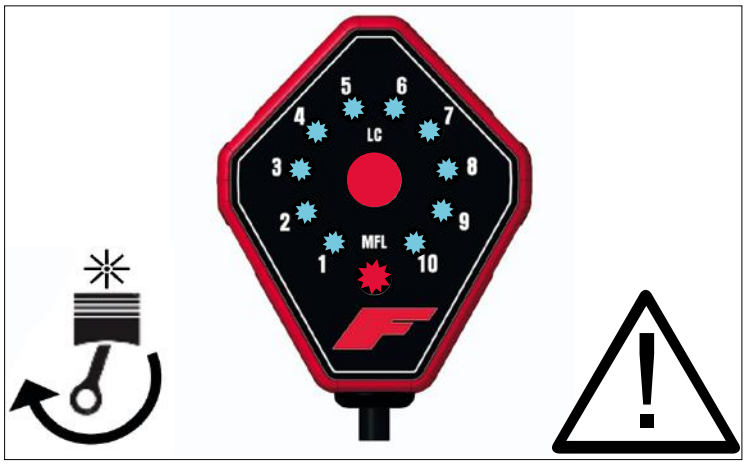

- **ENGINE RPM TOO HIGH**: all the LEDs are flashing, close the throttle just enough to return to the optimum condition (next picture);

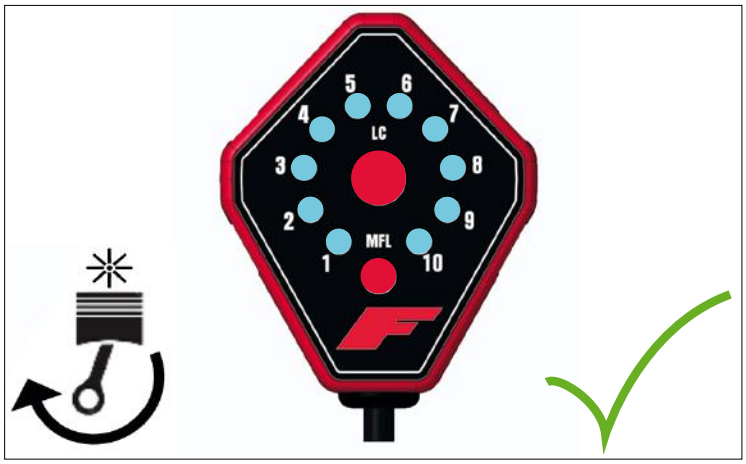

- **ENGINE RPM CORRECT**: all LED's are steady on, optimal condition for starting;

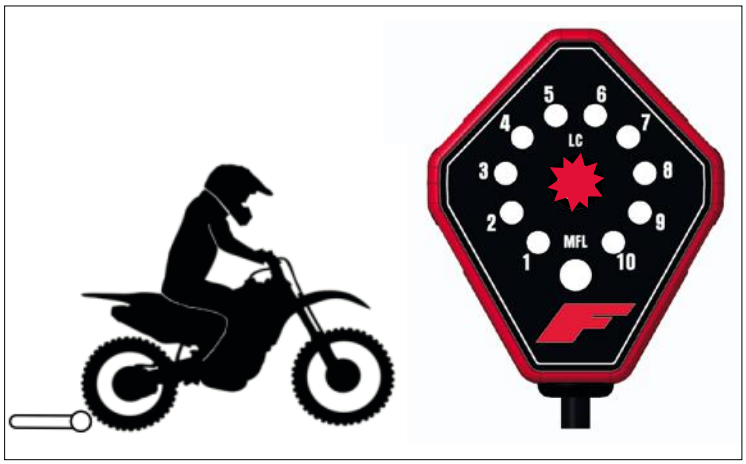

- After starting, all LEDs will be off, except for the LC LED which will flash;

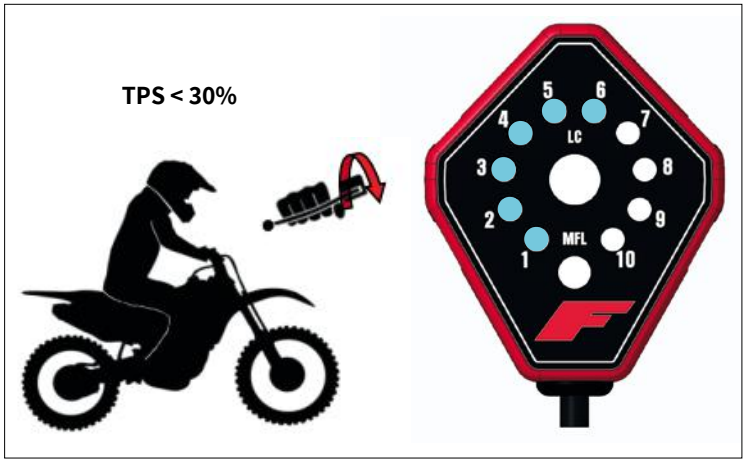

– When the throttle position (TPS) drops below 30%, LAUNCH CONTROL is switched off and the TRACTION CONTROL is reactivated at the previously set level.

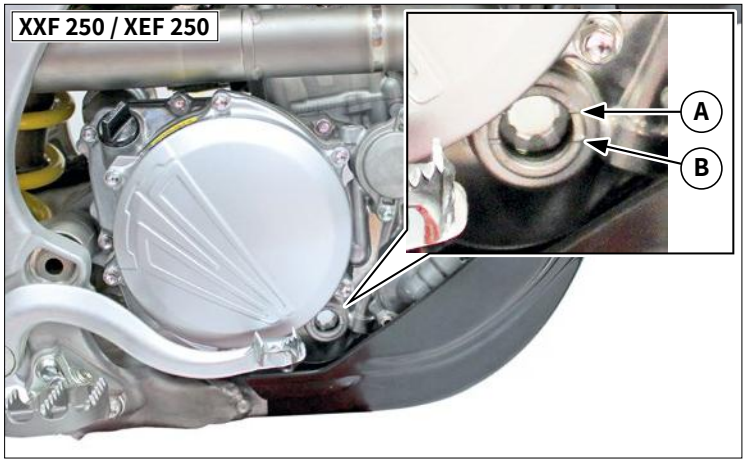

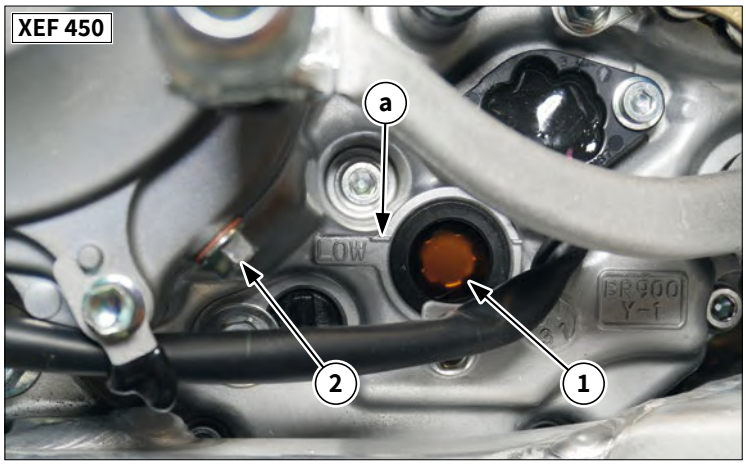

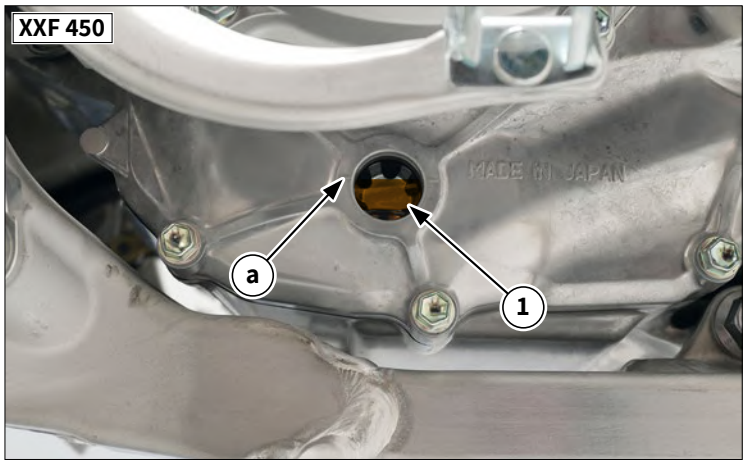

4.1 ENGINE OIL

Engine oil level check (XXF 250 / XEF 250 versions)

- Place the vehicle on a flat surface, in a vertical position by placing a suitable stand under the engine.
- Start the engine and warm it up for 1-2 minutes, then stop it and wait 1 minute for the engine oil to settle.
- Check that the engine oil level is between min. reference "A" and max. reference "B". If it is below the reference "A", add the engine oil indicated in the "RECOMMENDED PRODUCTS TABLE" section.

⚠ **Engine oil also lubricates the clutch, so wrong types of oil or additives can cause the clutch to slip. Use only types of oil that meet the specifications and do not add additives.**

Engine oil level check (XEF 450 version)

- Place the vehicle on a flat surface, in a vertical position by placing a suitable stand under the engine;
- Start the engine and warm it up for 1-2 minutes, then stop it and wait 1 minute for the engine oil to settle.
- Check through the inspection port "1" that the engine oil level is above the min. level reference mark "a". Remove the inspection plug "2" and ensure that no oil is leaking. If it is below the reference "A", add the engine oil indicated in the "RECOMMENDED PRODUCTS TABLE" section; in the event of leakage from the inspection hole, drain it until the correct level is reached.

⚠ **Engine oil also lubricates the clutch, so wrong types of oil or additives can cause the clutch to slip. Use only types of oil that meet the specifications and do not add additives.**

Engine oil level check (XXF 450 version)

- Start the engine and warm it up for 10 minutes, then switch off the engine.
- Place the vehicle on a flat surface, in a vertical position by placing a suitable stand under the engine.
- Start the engine, wait 10 seconds, switch off the engine, then wait a few minutes.
- Check through inspection port "1" that the engine oil level is between the minimum level (lower edge of inspection port) and the max. level mark "a".
- If it is below the reference "A", add the engine oil indicated in the "RECOMMENDED PRODUCTS TABLE" section; in the event of leakage from the inspection hole, drain it until the correct level is reached.

⚠ **Engine oil also lubricates the clutch, so wrong types of oil or additives can cause the clutch to slip. Use only types of oil that meet the specifications and do not add additives.**

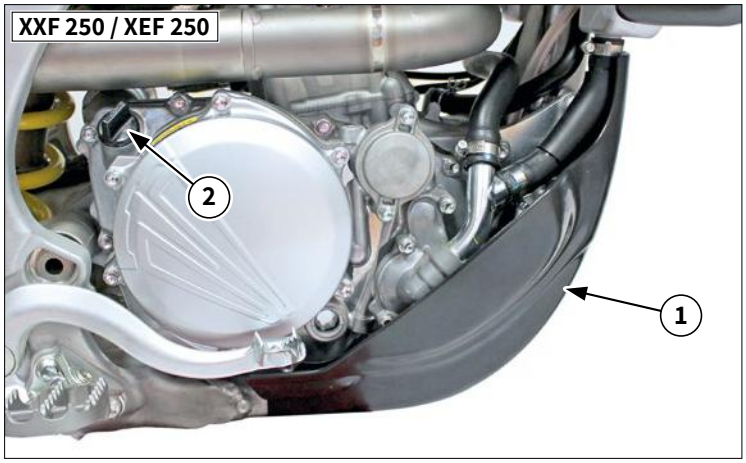

Engine oil change and engine oil filter replacement (XXF 250 / XEF 250 / XEF 450 versions)

- Remove the motor guard “1” (if fitted);
- Place the vehicle on a flat surface, in a vertical position by placing a suitable stand under the engine;
- Place a container under the engine;
- Start the engine, warm it up for several minutes then stop it and wait five minutes;
- Remove the filler cap “2”;

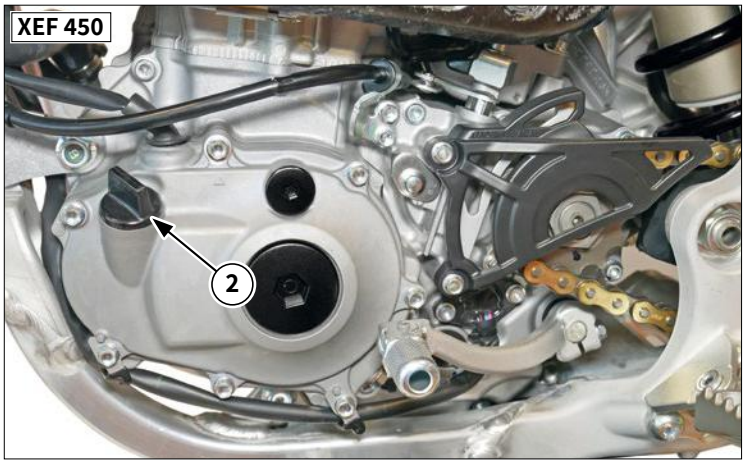

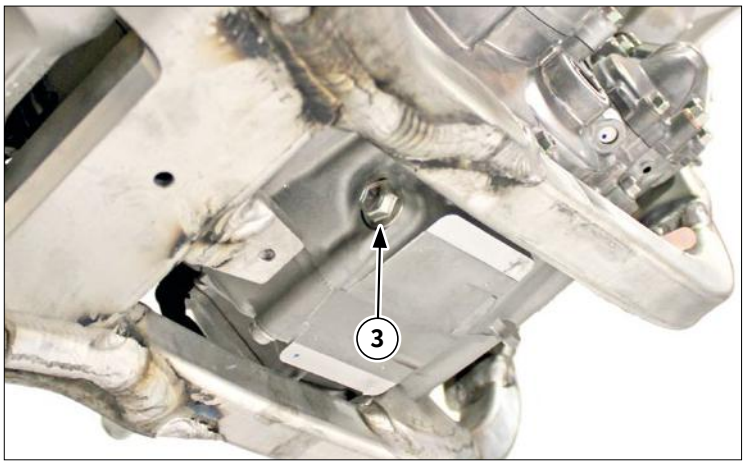

- Drain the engine oil by removing the drain bolt “3”;
- Once all the engine oil in the crankcases has drained, replace the copper gasket with a new one and install the drain bolt “3”.

Drain bolt:20 Nm (2.0 m•kg 15 ft•lb)

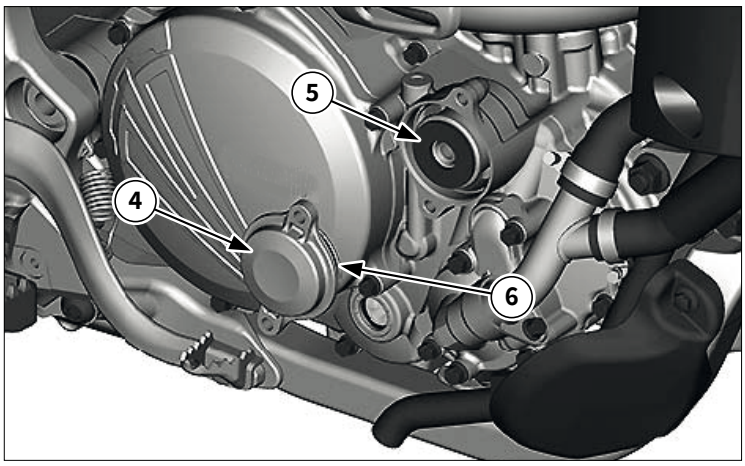

If necessary, replace the oil filter:

- Remove cover “4” and oil filter cartridge “5”;
- Install a new oil filter cartridge “5” and a new O-Ring “6”;
- Then refit the cover “4”.

Cover bolt: 10 Nm (1.0 m•kg 7.4 ft•lb)

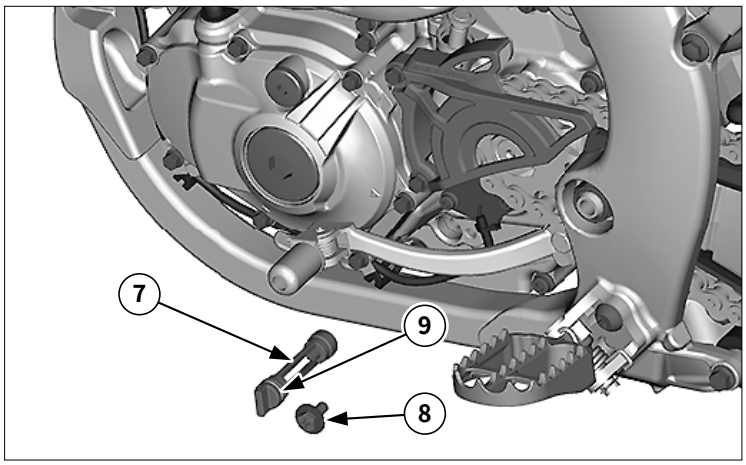

– Check the secondary oil filter “7” removing screw “8”.
– Remove the secondary oil filter “7”.

Clean it with Kerosene if it is clogged with dirt, replace if damaged.

– Replace the O-Ring “9” with a new one then replace the secondary oil filter “7”.

Oil filter bolt: 10 Nm (1.0 m•kg 7.4 ft•lb)

Engine oil change and engine oil filter replacement (XXF 450 version)

– Place the vehicle on a flat, upright surface by placing a suitable stand under the engine;
– Place a container under the engine;
– Start the engine, warm it up for several minutes then stop it and wait five minutes;
– Remove filler cap “1”;

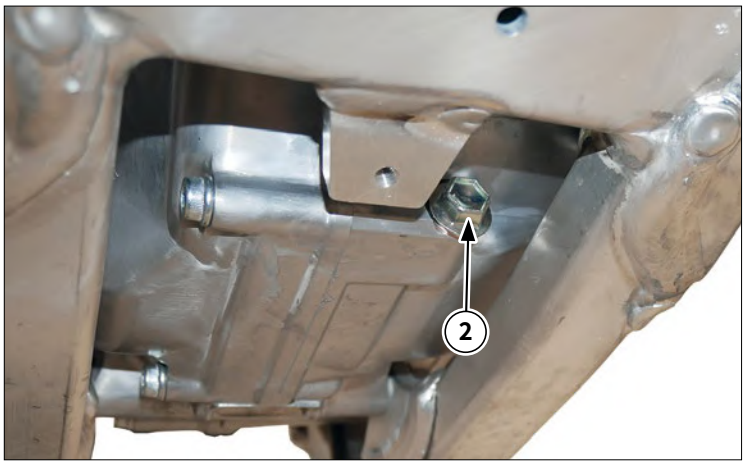

– Drain the engine oil by removing drain bolt “2”, (crankcase side) together with the gasket;

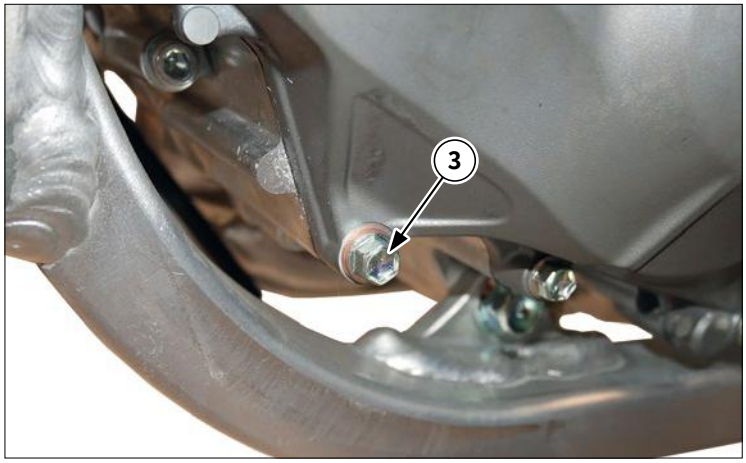

– Remove drain bolt “3” (oil reservoir side) together with the gasket;
– Completely drain the engine oil from the oil reservoir and crankcase;
– Once all the engine oil has been drained, replace the copper gaskets with new ones and install drain bolt “2” and “3”.

Drain bolt (oil reservoir): 10 Nm (1.0 m•kg 7.4 ft•lb)

Drain bolt (crankcase): 20 Nm (2.0 m•kg 15 ft•lb)

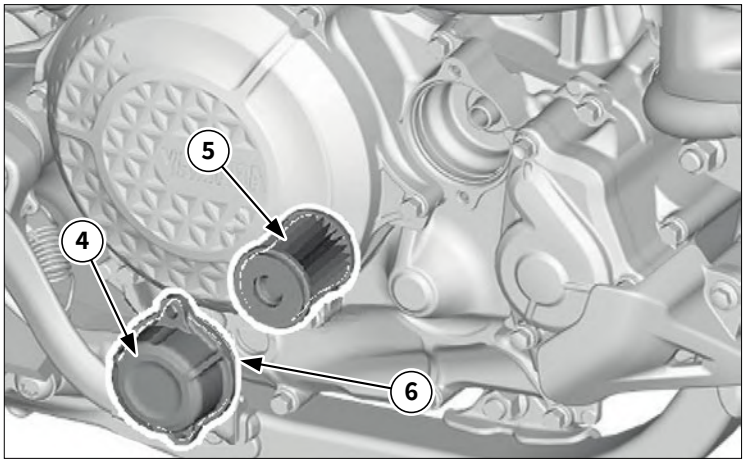

If necessary, replace the oil filter:

- Remove cover “4” and oil filter cartridge “5”;
- Install a new oil filter cartridge “5” and a new O-Ring “6”;
- Then refit the cover “4”.

Cover bolt: 10 Nm (1.0 m•kg 7.4 ft•lb)

Engine oil filling (XXF 250 / XEF 250 versions)

- Pour the engine oil through the oil filler cap hole until the correct level is reached, then install the filler cap.

Engine oil quantity:
Oil change: 0.73 L (0.77 US qt, 0.64 Imp.qt)
Oil change and filter cartridge replacement:
0.75 L (0.79 US qt, 0.66 Imp.qt)
Filling after crankcase assembly:
0.95L (1.00 US qt, 0.48 Imp.qt)

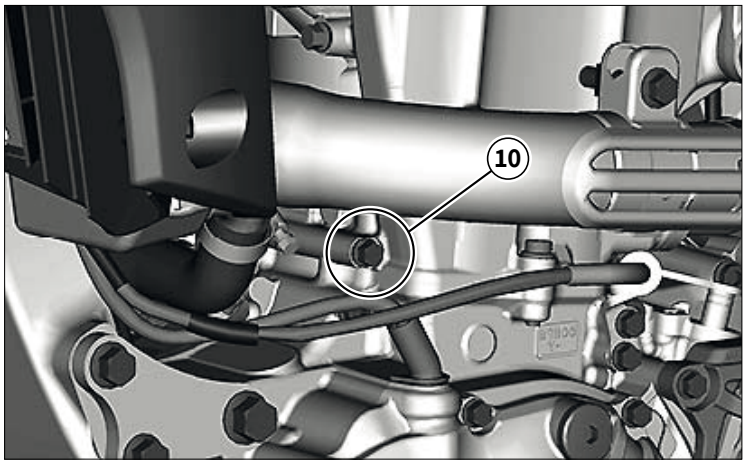

- Check the engine oil pressure by loosening the control bolt “10” slightly;

Always loosen the control bolt “10” before starting the engine.

- Start the engine and let it idle until the engine oil filters through the control bolt “10”;

Always keep the engine at idle speed only during the check.

If there is no engine oil leakage after one minute, switch off the engine immediately to avoid seizing.

- If there is no engine oil leakage, check the engine oil line and oil pump for leaks and ensure that the engine oil line and oil pump are not damaged;
- Check the oil pressure again, if present tighten control bolt “10”.

Control bolt: 10 Nm (1.0 m-kg 7.4 ft-lb)

- Check that the engine oil level is correct and reinstall the engine guard, if fitted.

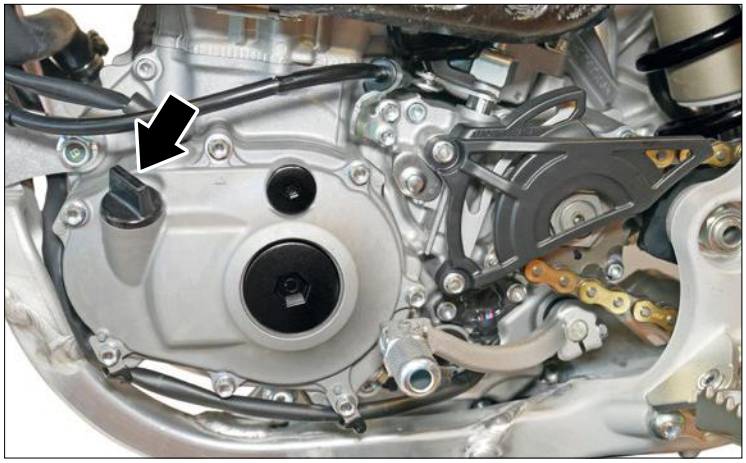

Engine oil filling (XEF 450 version)

– Pour the engine oil through the oil filler cap hole until the correct level is reached, then install the filler cap.

Engine oil quantity:
Oil change: 0.63 L (0.67 US qt, 0.55 Imp.qt)
Oil change and filter cartridge replacement: 0.65 L (0.69 US qt, 0.57 Imp.qt)
Filling after crankcase assembly: 0.90L (0.95 US qt, 0.79 Imp.qt)

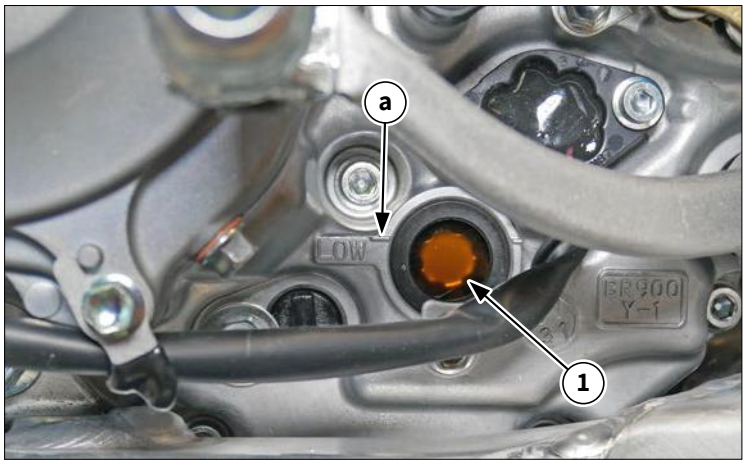

– Start the engine, keeping it at idle, and check the engine oil pressure;

Always keep the engine at idle speed only during the check.

– Check through sight glass “1” that the engine oil is flowing and that the level is decreasing while the engine is running,

If the engine oil level does not drop after the engine has been started, switch off the engine immediately to avoid seizure.

– If, when the engine is running, the engine oil level does not drop to the “a” level reference mark, check that there are no leaks in the lubrication circuit and that the oil passages and engine oil pump are not damaged.
– Check the oil pressure again;
– Check that the engine oil level is correct and, if present, reinstall the engine guard.

Engine oil filling (XXF 450 version)

– Pour the engine oil through the oil filler cap hole until the correct level is reached, then install the filler cap.

Engine oil quantity:
Oil change: 0.94 L (0.99 US qt, 0.83 Imp.qt)
Oil change and filter cartridge replacement: 0.96 L (1.01 US qt, 0.84 Imp.qt)
Filling after crankcase assembly: 1.20L (1.27 US qt, 1.06 Imp.qt)

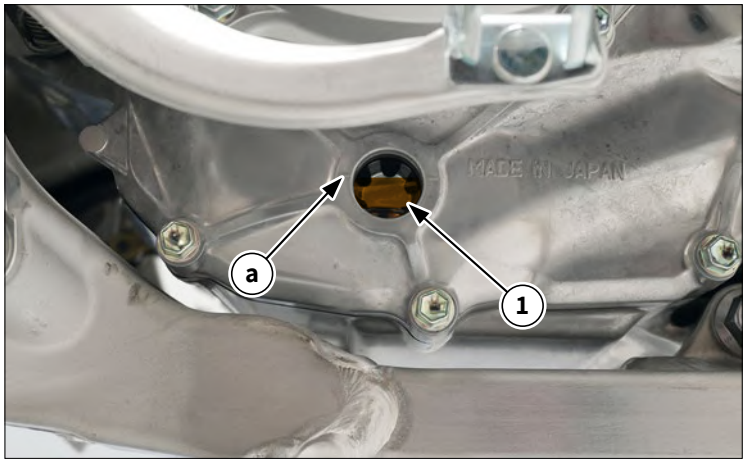

– Start the engine, keeping it at idle, and check the engine oil pressure;

⚠ **Always keep the engine at idle speed only during the check.**

– Check through sight glass “1” that the engine oil is flowing and that the level is decreasing while the engine is running,

⚠ **If the engine oil level does not drop after the engine has been started, switch off the engine immediately to avoid seizure.**

– If, when the engine is running, the engine oil level does not drop to the “a” level reference mark, check that there are no leaks in the lubrication circuit and that the oil passages and engine oil pump are not damaged.
– Check the oil pressure again;
– Check that the engine oil level is correct and, if present, reinstall the engine guard.

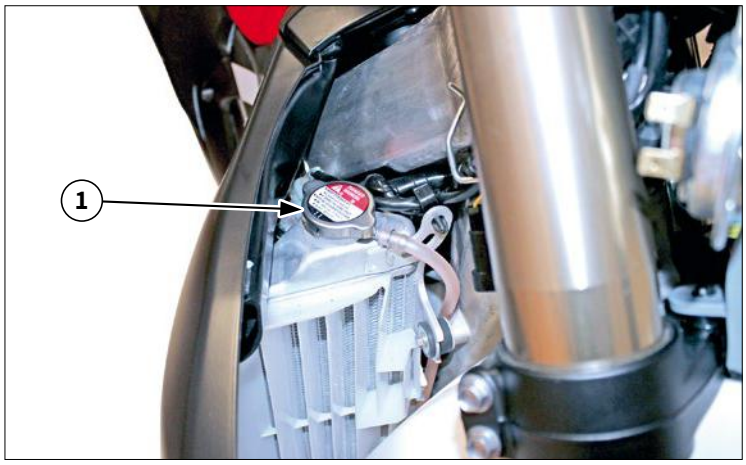

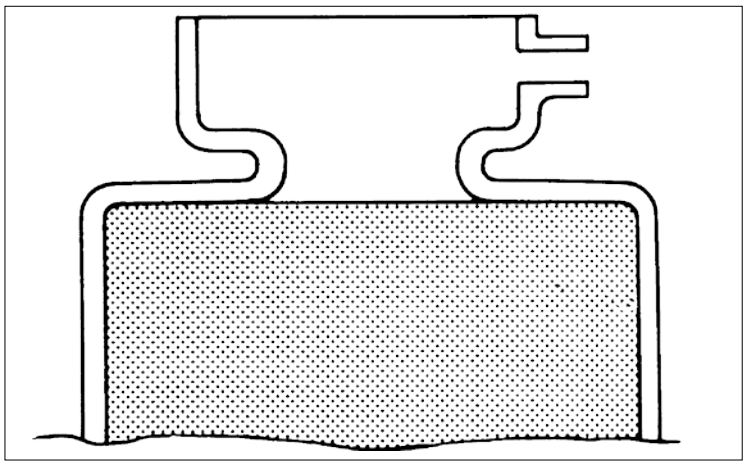

4.2 COOLANT

Checking the coolant level

⚠ **Do not remove the radiator cap “1”, drain bolt and hoses when the engine and radiator are hot. Scalding hot fluid and steam may be blown out under pressure, which could cause serious injury. When the engine has cooled, place a thick towel over the radiator cap, slowly rotate the cap counterclockwise to the detent. This procedure allows any residual pressure to escape. When the hissing sound has stopped, press down on the cap while turning counterclockwise and remove it.**

⚠ **Hard water or salt water is harmful to the engine parts. You may use distilled water, if you can’t get soft water.**

– Place the machine on a level place, and hold it in an upright position;
– Remove the radiator cap “1” and check the coolant level. Add coolant if the coolant level is low.

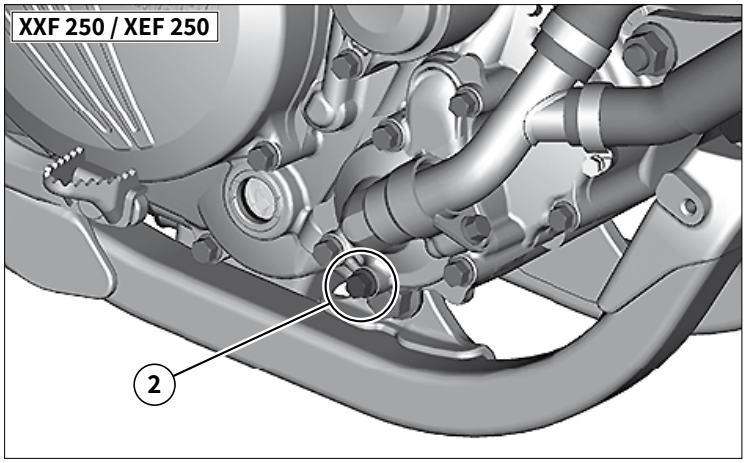

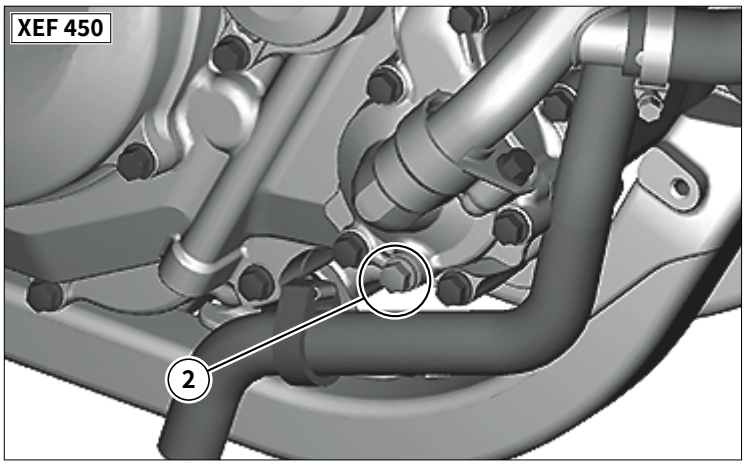

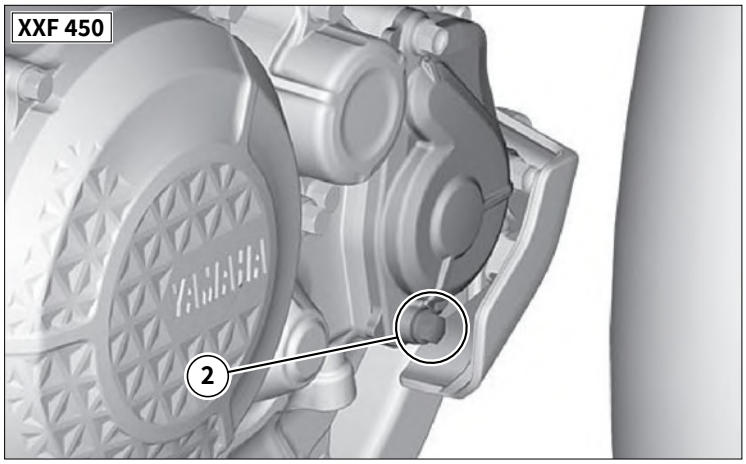

Coolant replacement

Do not remove the radiator cap "1", drain bolt and hoses when the engine and radiator are hot. Scalding hot fluid and steam may be blown out under pressure, which could cause serious injury. When the engine has cooled, place a thick towel over the radiator cap, slowly rotate the cap counterclockwise to the detent. This procedure allows any residual pressure to escape. When the hissing sound has stopped, press down on the cap while turning counterclockwise and remove it.

- Remove the engine guard (if fitted).
- Place the vehicle on a flat surface, in a vertical position by placing a suitable stand under the engine.
- Remove the radiator cover "1" and the coolant drain plug "2", then drain the coolant completely by collecting it in the container under the engine;
- Install a new washer on the drain plug "1" and install it in its housing;
- Fill the engine and the radiator with "ETHYLENE GLYCOL WITH ANTICORROSIVE FOR ALUMINIUM ENGINES", up to the level previously indicated.

Coolant quantity (XXF 250 / XEF 250): 0,93 L (0.98 US qt, 0.82 Imp.qt)

Coolant quantity (XXF 450 / XEF 450): 1,03 L (1.09 US qt, 0.91 Imp.qt)

Do not add additives or other substances and use the products recommended in the "RECOMMENDED PRODUCTS TABLE" section.

Do not mix more than one type of ethylene glycol antifreeze containing corrosion inhibitors for aluminum engine.

Do not use water containing impurities or oil.

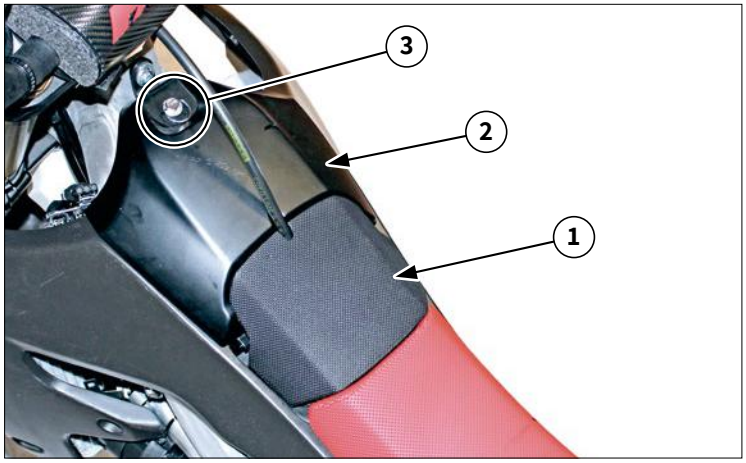

4.3 AIR FILTER

(XXF 250 / XEF 250 / XEF 450 versions)

Proper air filter maintenance is the biggest key to preventing premature engine wear and damage.

Never run the engine without the air filter element in place; this would allow dirt and dust to enter the engine and cause rapid wear and possible engine damage.

- Remove the initial part of the seat “1”;
- Loosen the quick fastener screw “3” and remove the air filter case cover “2”;

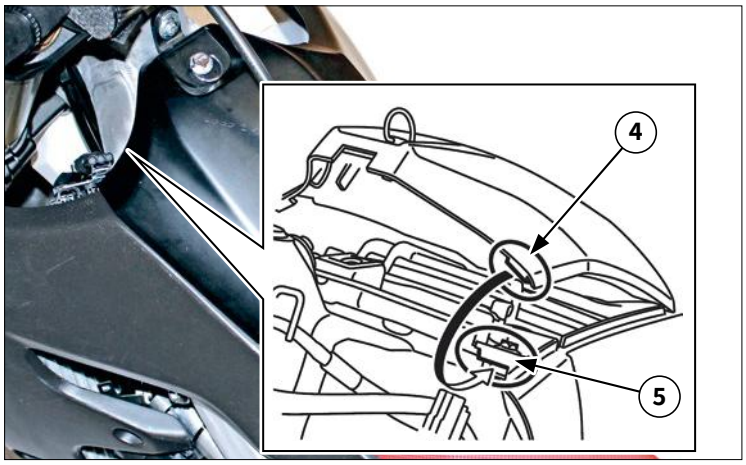

- Remove the two ribs “4” located on the left and right sides of the projections “5” on the air scoop, and slide the air filter case cover toward the front of the vehicle to remove it.

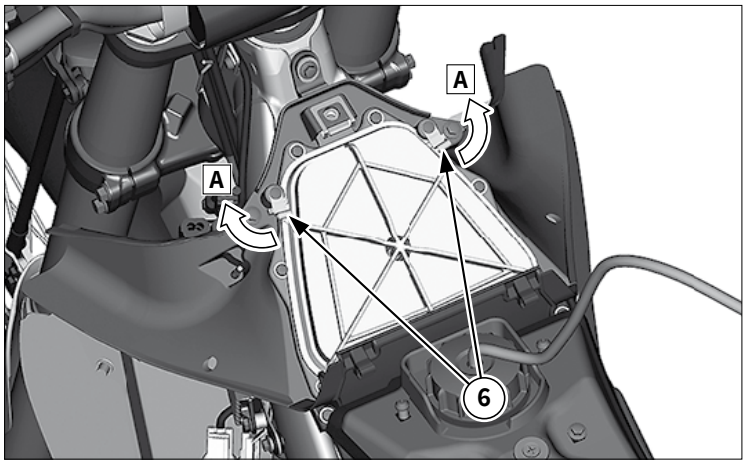

- Turn the plates “6” in direction “A”.

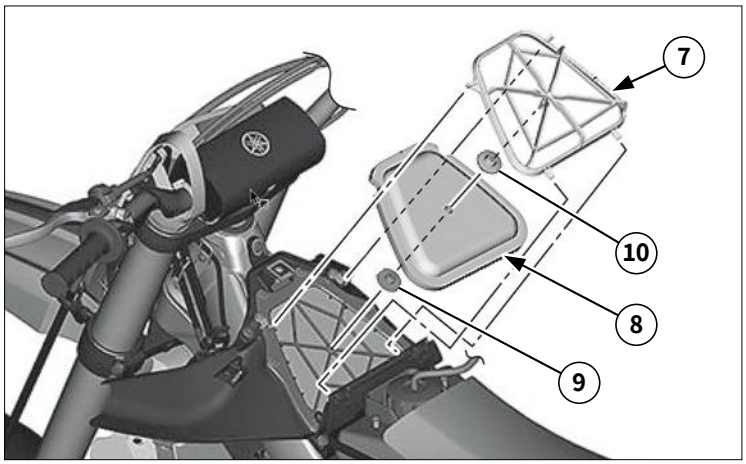

- Remove the air filter guide “7”;
- Remove the filtering element “8” from the air filter guide;
- Remove the guide “9” from the filtering element;
- Remove the gasket “10” from the filtering element.

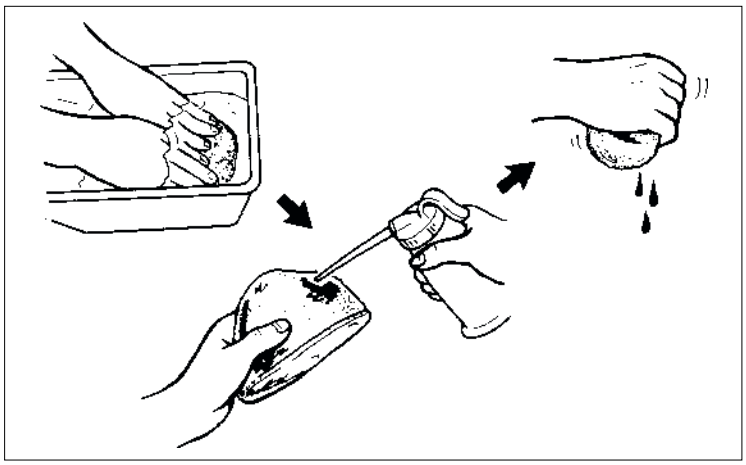

- Check that the filtering element is not damaged, if it is, replace it;
- Clean the filtering element with a dedicated solvent, after cleaning remove the solvent by squeezing the filtering element and blowing it with compressed air;
- Apply air filter oil to the filtering element, squeeze it to remove excess oil.

⚠ **The cartridge must be damp, but not wet.**

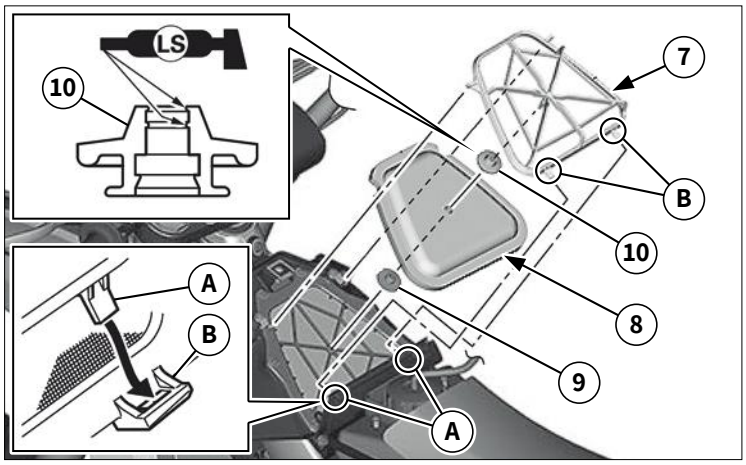

- Install gasket “7” on the filtering element;
- Install guide “8” on the filtering element;
- Install filtering element “9” on guide “10”;
- Then install the guide/air filter assembly on the vehicle.

ⓘ **Make sure that the two projections “A” at the rear side of the vehicle on the air filter guide are securely fitted into the two slots “B” in the air filter case.**

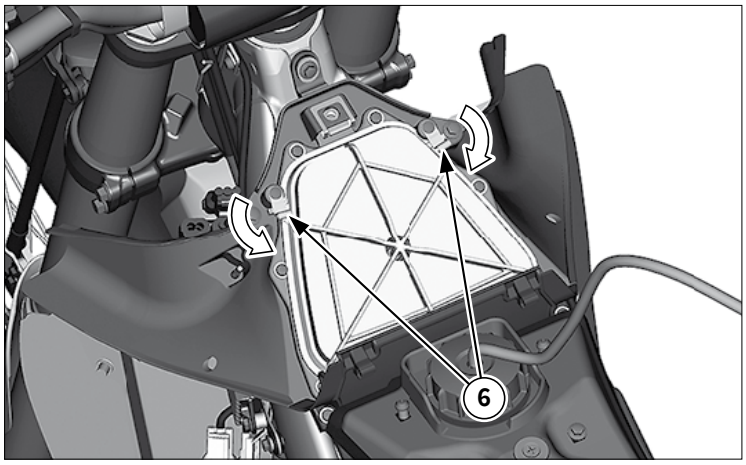

- Turn the plates “6” to the original position.

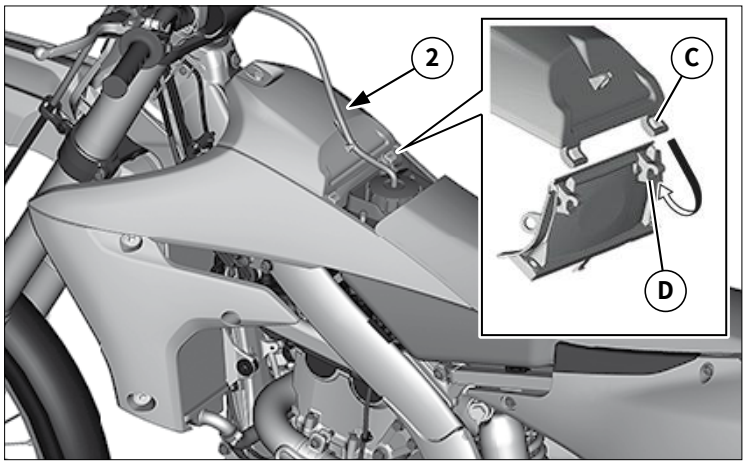

- Install the filter casing cover “2” making sure that the two housings “C” on the cover are correctly inserted on the protrusions “D” of the filter casing.

⚠ **Also make sure that the two ribs, located on the right and left side of the cover, are correctly aligned with the protrusions on the intake ducts of the filter casing.**

- Install the initial part of the seat.

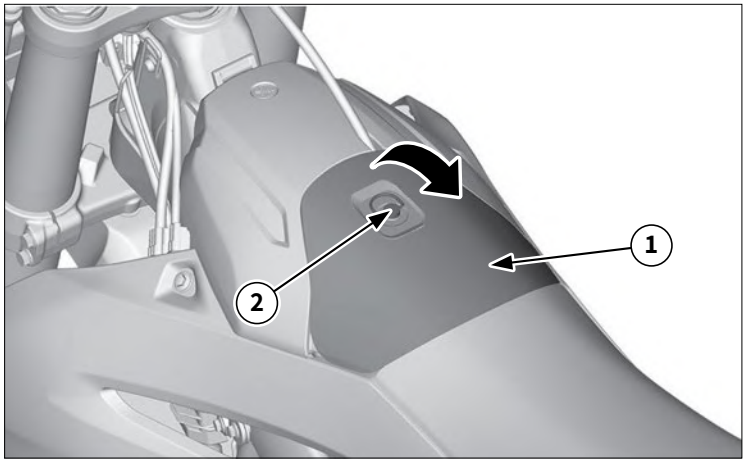

4.3 AIR FILTER

(XXF 450 version)

Proper air filter maintenance is the biggest key to preventing premature engine wear and damage.

Never run the engine without the air filter element in place; this would allow dirt and dust to enter the engine and cause rapid wear and possible engine damage.

– Remove the secondary seat part “1” by slightly pulling the quick-release fastener “2”, rotate it 90°, lift it in the direction of the rear of the vehicle;

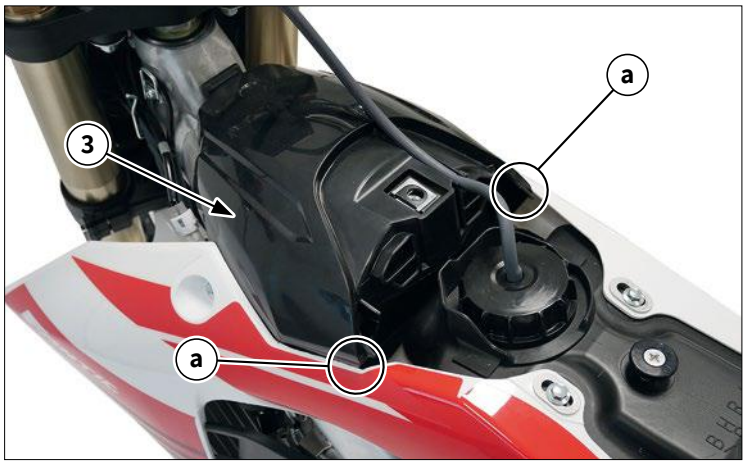

– Remove the filter casing cover “3” by lifting the rear side and pushing from the inside the side “a” of the intake duct, to release the two ribs “b” on both sides of the filter casing cover from filter casing”4”;

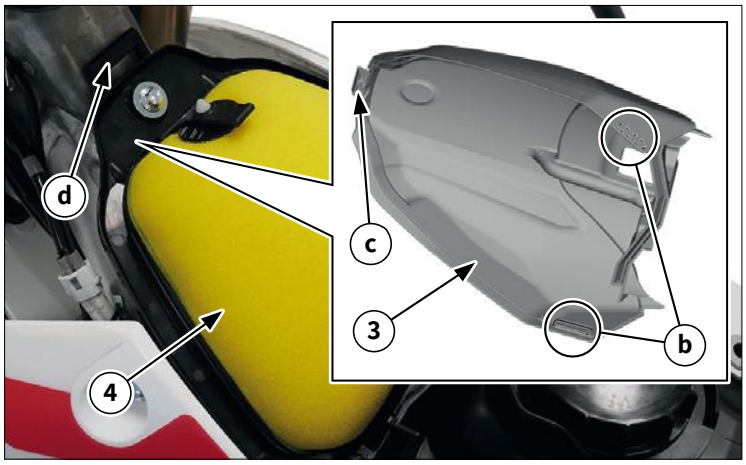

– Then slide the filter casing cover “3” towards the rear of the vehicle to remove the protrusion “c” from hole “d” in the filter casing “4”;

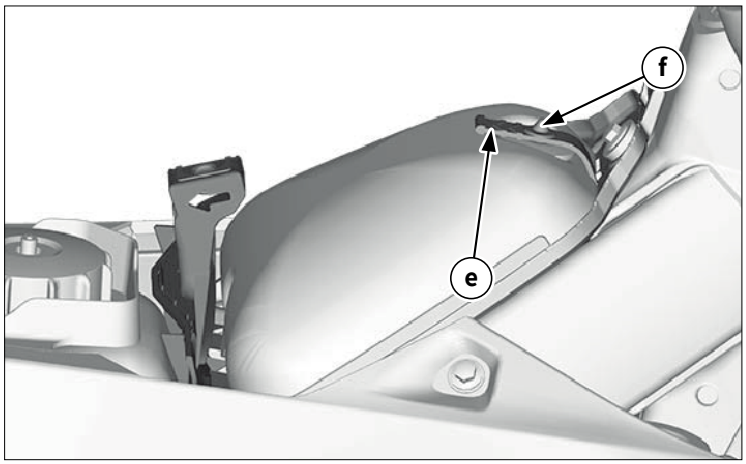

– Release the elastic clamps “e” from protrusion “f”.

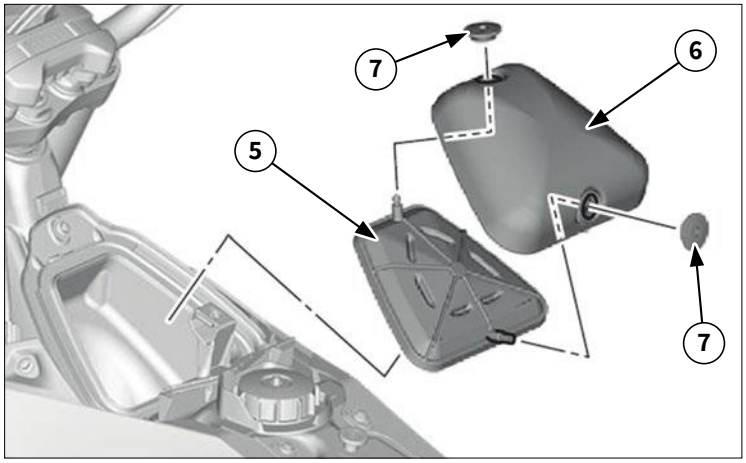

- Remove filtering element guide '5';
- Remove filtering element "6" from the filter element guide;
- Remove gasket "7" from the filtering element.

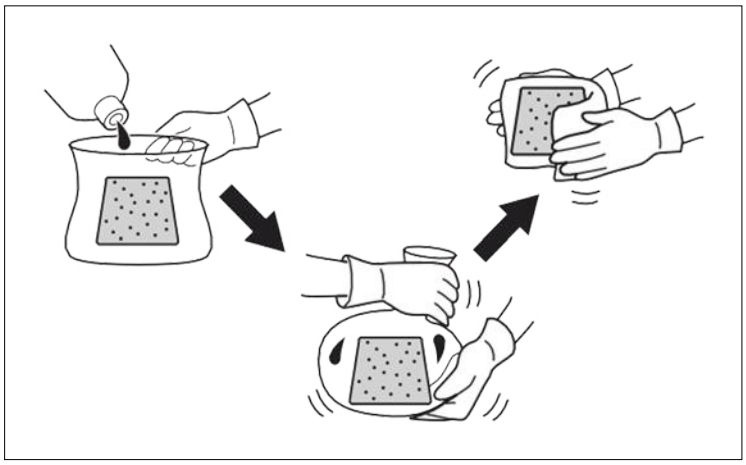

- Check that the filtering element is not damaged, if it is, replace it;
- Clean the filtering element with a dedicated solvent, after cleaning remove the solvent by squeezing the filtering element and blowing it with compressed air;
- Apply air filter oil to the filtering element, squeeze it to remove excess oil.
- Place the filtering element in a plastic bag and drip the filter oil into the bag;
- With the element inside the bag, rub it thoroughly so that the element is evenly soaked in oil;
- Wrap the element in a clean cloth, gently wipe the element and remove excess oil.

⚠ **The cartridge must be damp, but not wet.**

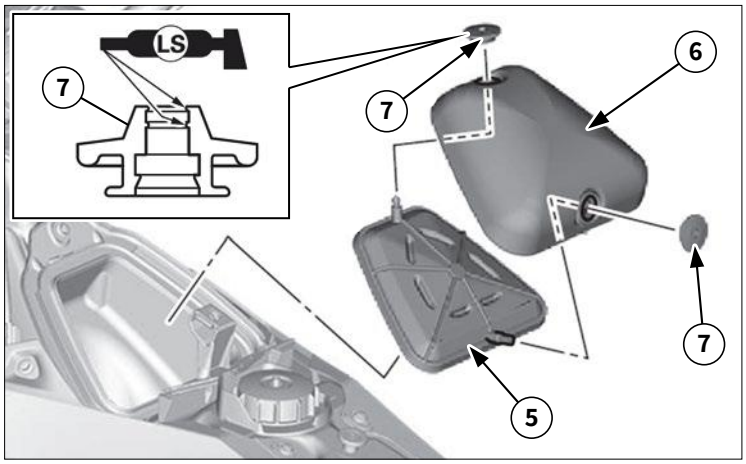

- Install gasket "7" on the filtering element.
- Install the filtering element "6" on the filtering element guide;
- Install the filtering element guide "5".

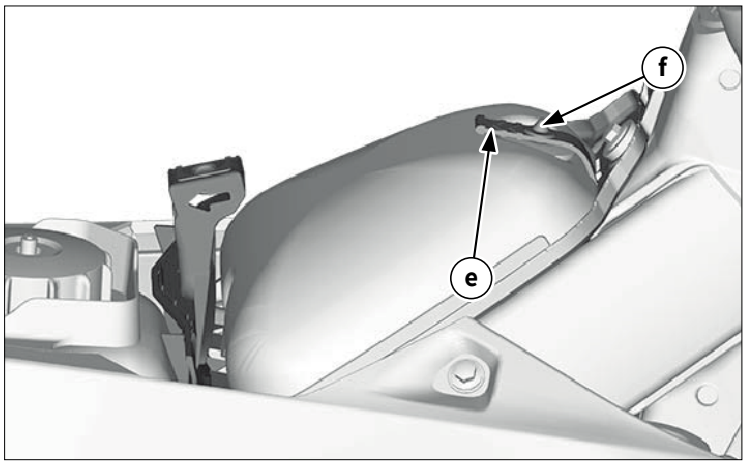

- Place the elastic clamp "e" on protrusion "f".

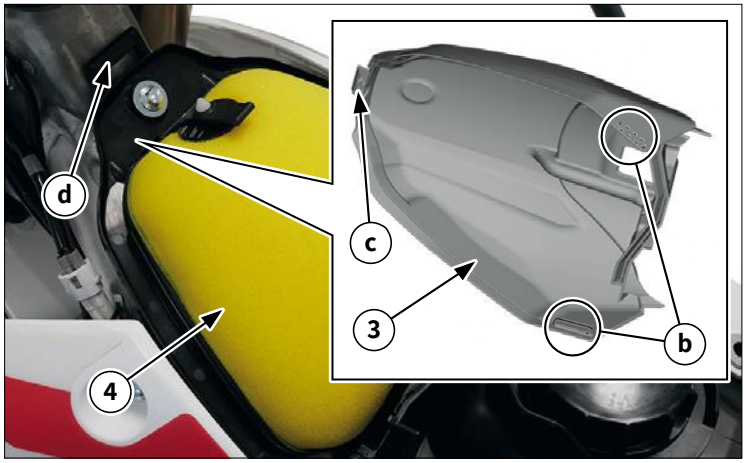

- Insert the protrusion “c” on filter casing cover “3” into hole “d” in the filter casing “4”;
- Push the rear side of the filter casing cover to engage the ribs “b” to the filter casing.

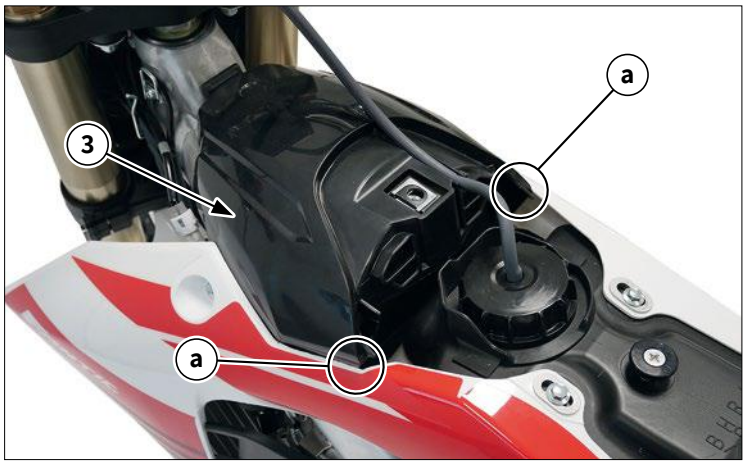

- Install the filter casing cover “3” making sure that the two ribs “b” on the cover are correctly inserted on the protrusions “e” of the filter casing;

⚠ **Also make sure that the two ribs, located on the right and left side of the cover, are correctly aligned with the protrusions on the intake ducts of the filter casing.**

- Install the secondary part of the seat.

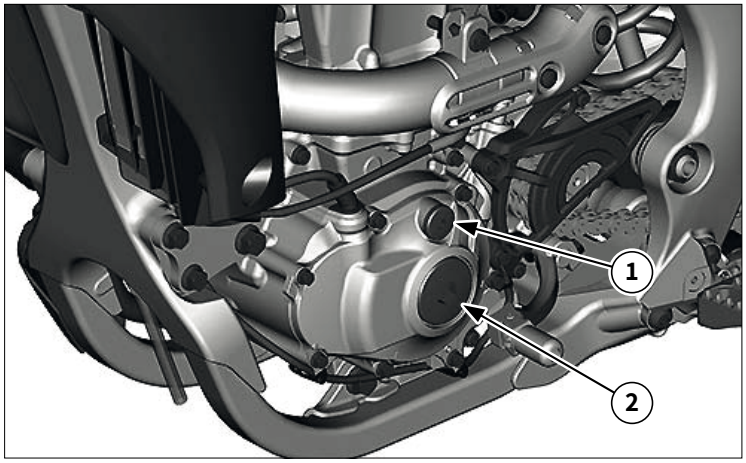

4.4 CAMSHAFTS

Removal (XXF 250 / XEF250 versions)

Remove:

- Seat, left and right conveyors, air filter casing, fuel tank;
- Remove the spark plug and valve cover;
- Remove timing reference cap “1” and crankshaft access cap “2”.

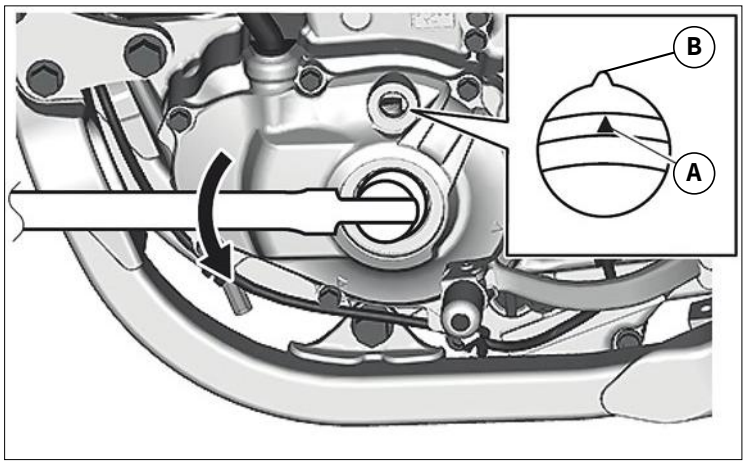

- Turn the crankshaft counter-clockwise with a spanner, using the appropriate access hole on the crankcase cover;
- Align the top dead centre notch (TDC) “A” on the flywheel with the reference “B” on the left crankcase cover.

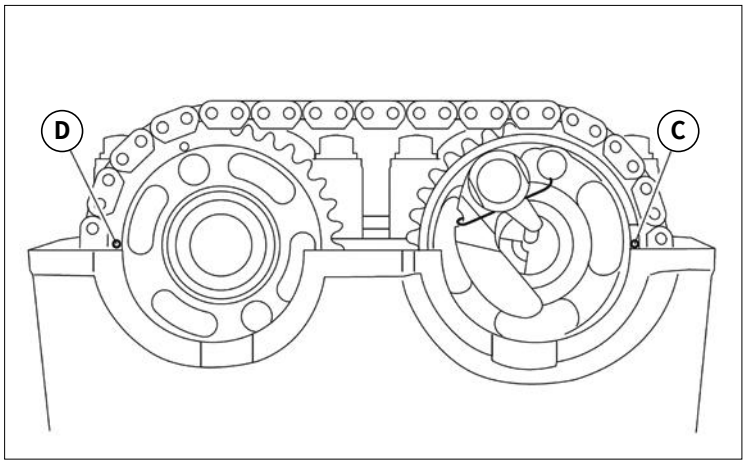

- Align the notch “C” of the exhaust camshaft and the notch “D” of the intake camshaft with the cylinder head plane.

⚠ **Align the crankshaft and camshaft references simultaneously. It is possible to be in a situation where the crankshaft is aligned with the references, while the camshafts are not. In this case it is necessary to make the crankshaft move one more complete revolution.**

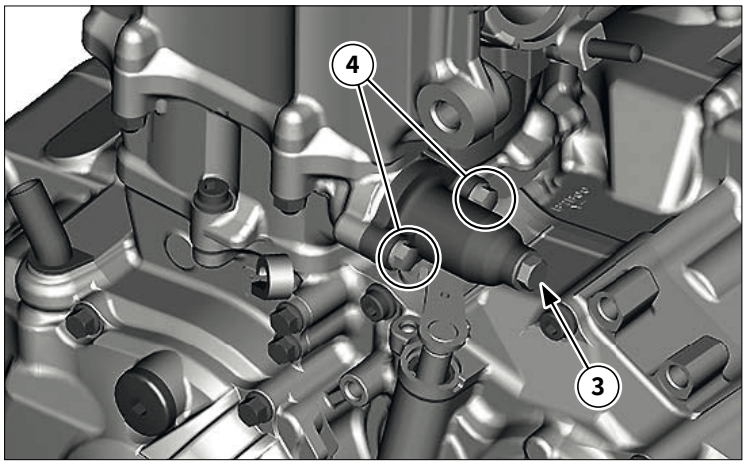

- Remove the timing chain tensioner cap “3”;
- Remove the timing chain tensioner fixing screws “4”, then remove the timing chain tensioner from the vehicle.

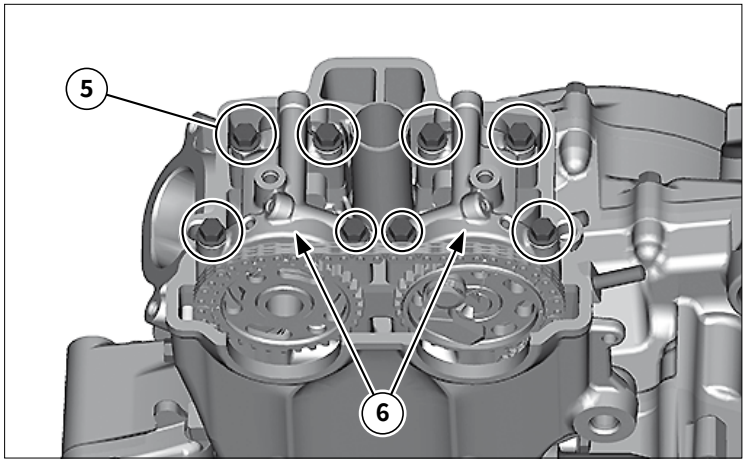

– Remove bolts “5” of the camshaft supports following a crossed pattern, starting from the outside to the inside;
– Remove the camshaft supports “6” from the head.

⚠ **The camshaft cap bolts must be removed evenly to prevent damage to the cylinder head, camshafts or camshaft caps.**

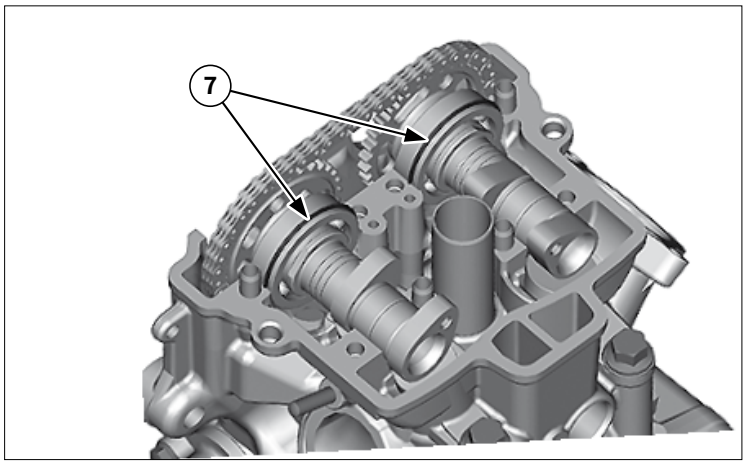

– Recover the guides “7” of the camshaft bearings, taking care not to drop them inside the engine.

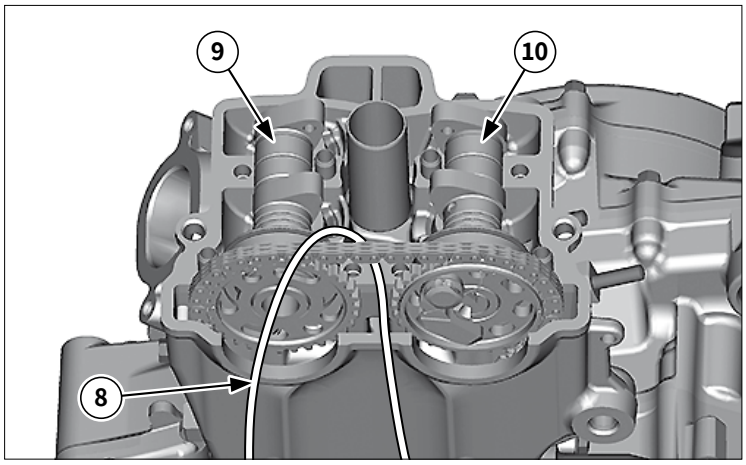

– Connect a metal wire “8” to the timing chain to prevent it from falling inside the engine, then pull it off the camshaft sprockets and tie it to the frame using the metal wire;
– Remove camshafts “9” and “10” from the head.

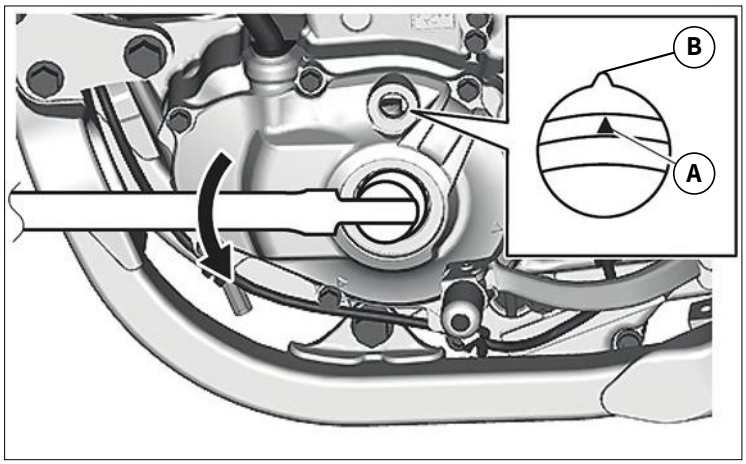

Installation (XXF 250 / XEF250 versions)

– Check that the top dead centre notch (TDC) “A” on the flywheel is aligned with the reference “B” on the left crankcase cover. If not, align it by turning the crankshaft counter-clockwise.

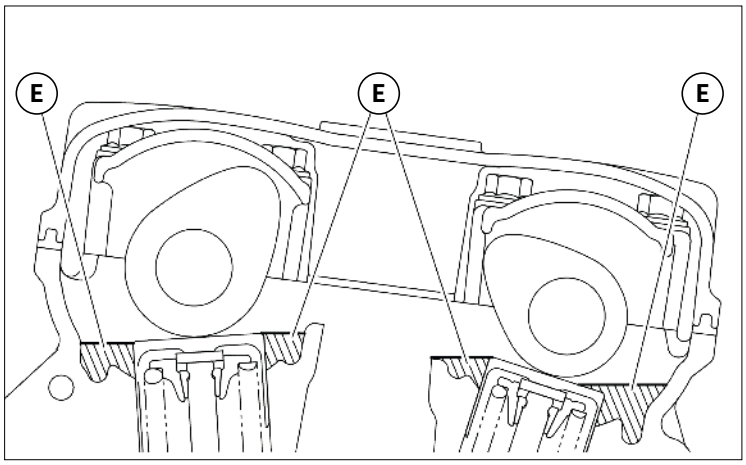

- Apply molybdenum disulphide grease to the sliding surfaces of the camshafts;
- Apply the engine oil on the decompression system.
- Fill the cylinder head with engine oil up to the tops “E” of the valve lifters.

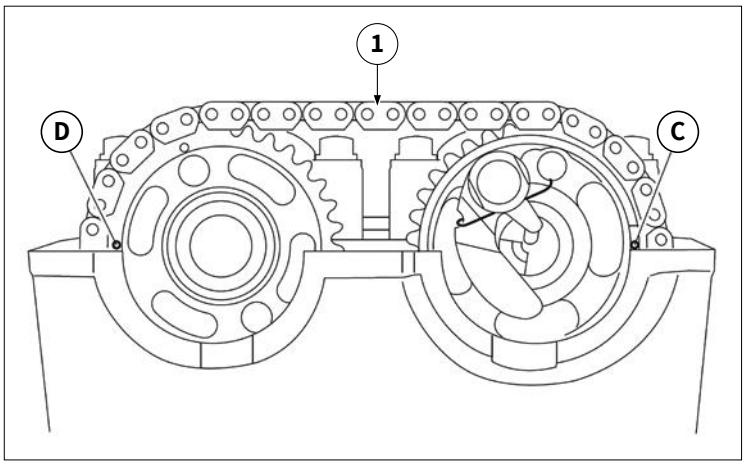

- Install the intake and exhaust camshafts in the head.
- Install the timing chain “1” on the sprockets of both camshafts. Make sure that the notch “C” of the exhaust camshaft and the notch “D” of the intake camshaft are aligned with the head plane.

When installing the camshafts and timing the engine, do not rotate the crankshaft. Damage and/or incorrect engine timing may occur.

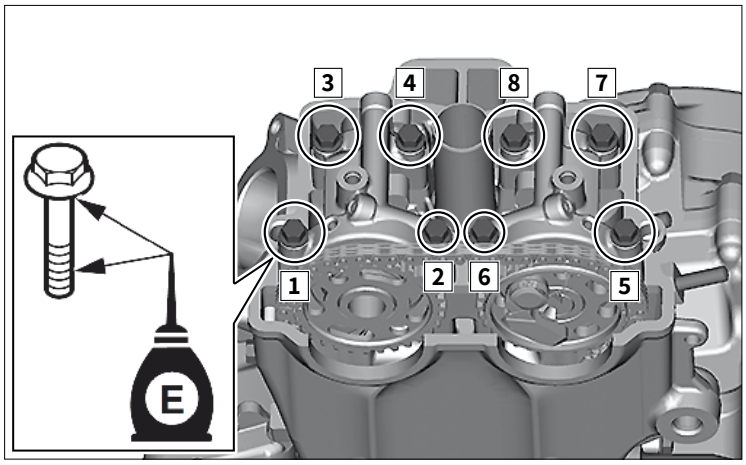

- Install the camshaft bearing guides and camshaft supports;
- Apply engine oil to the threads and contact surfaces of the camshaft support bolts, install them and tighten them to the specified torque. Perform the tightening operation in two/three steps, following the diagram shown in the figure.

The bolts of the camshaft supports must be tightened evenly to prevent damage to the camshaft head or camshaft supports.

Camshaft support bolt:
10 Nm (1.0 m•kg 7.4 ft•lb)

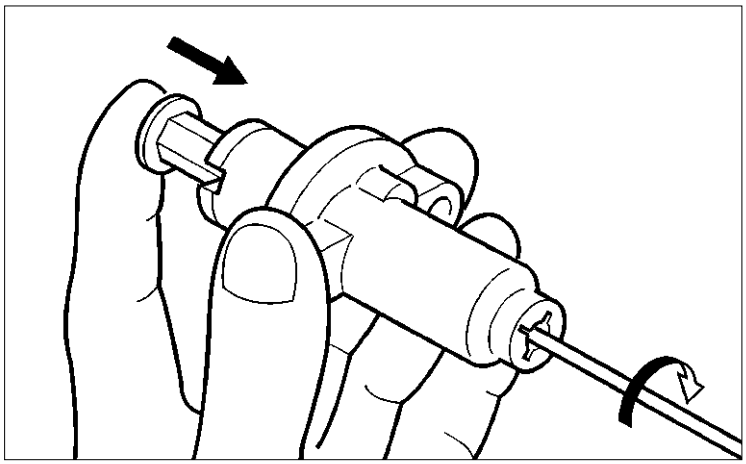

- Install the timing chain tensioner, operating as described below;
- Press the tensioner rod with your fingers at the same time, using a flat, thin-blade screwdriver, turn the rod clockwise until it is in the fully closed position.

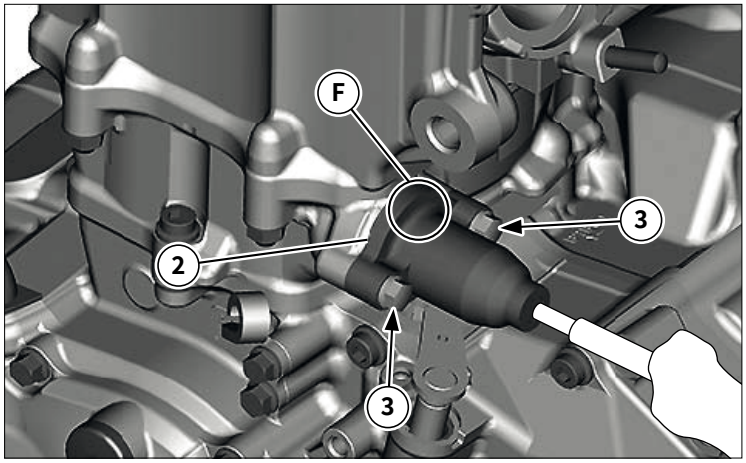

- Install a new gasket “2” in the housing on the cylinder;
- Keeping the rod completely closed, install the tensioner on the cylinder making sure that the UP reference “F” is facing upwards, then tighten the fastening bolts “3”.

Timing chain tensioner bolt:
10 Nm (1.0 m•kg 7.4 ft•lb)

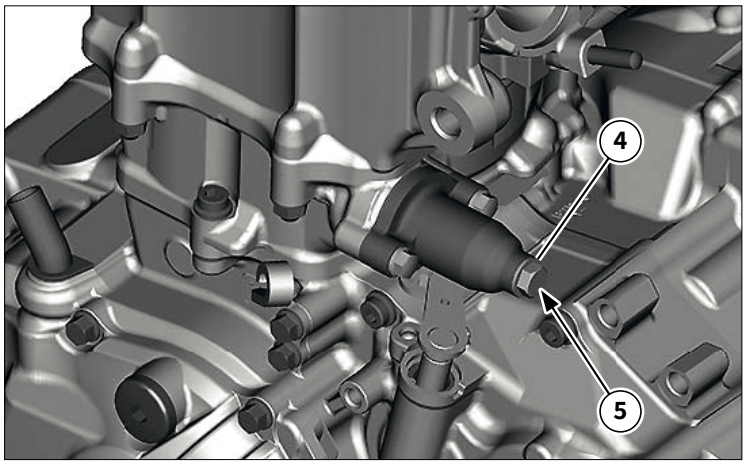

- Release the screwdriver and check that the tensioner rod comes out smoothly and easily;
- Install the gasket “4” and the timing chain tensioner cap “5”.

Timing chain tensioner cap:
6 Nm (0.6 m•kg 4.4 ft•lb)

- Rotate the crankshaft counter-clockwise for several turns, checking that the movement is smooth and free of interference;
- Check that the crankshaft and camshaft references are correctly aligned with the references on the left crankcase cover and cylinder head;
- Refit the spark plug and valve cover.
- Reassemble: Fuel tank, air filter casing, right and left conveyors, seat.

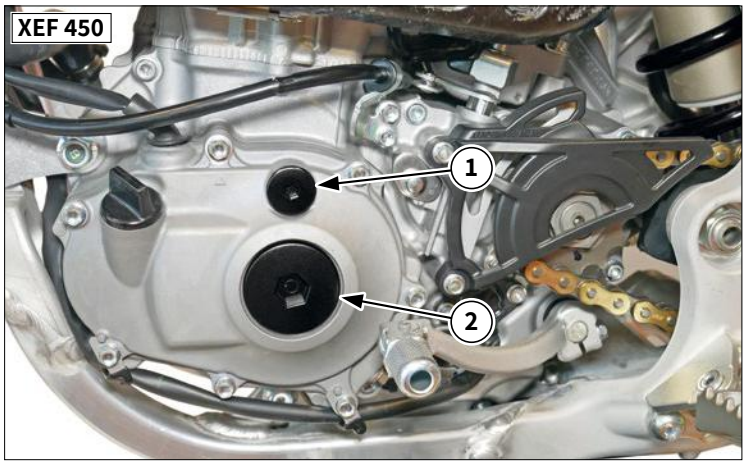

Removal (XXF 450 / XEF450 versions)

Remove:

- Seat, left and right conveyors, air filter casing, fuel tank;
- Remove the spark plug and valve cover;
- Remove timing reference cap “1” and crankshaft access cap “2”.

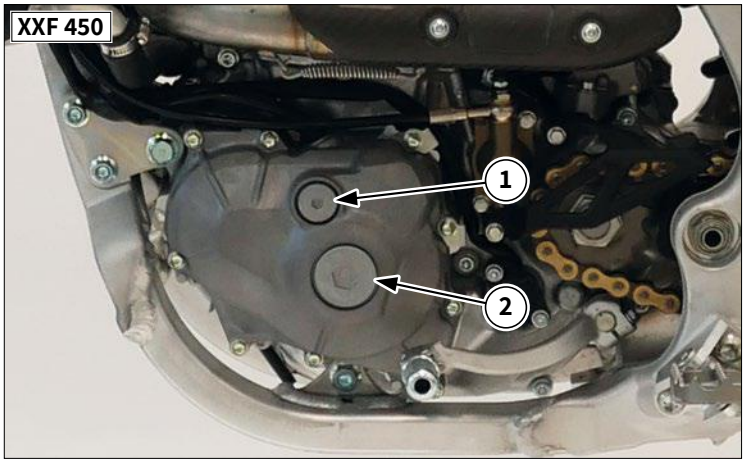

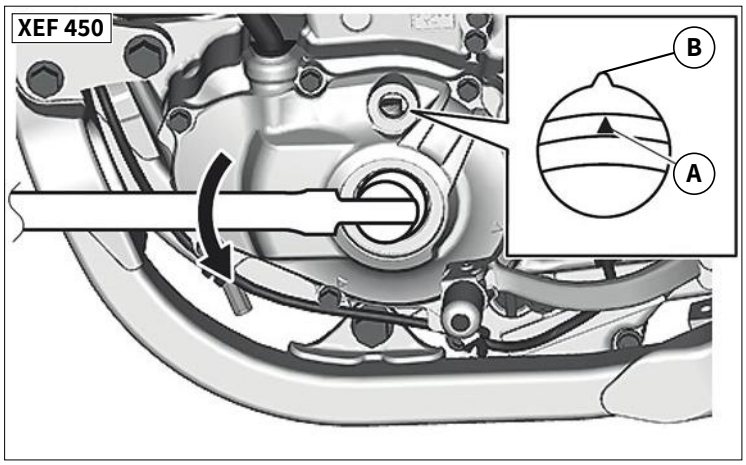

– Turn the crankshaft counter-clockwise with a spanner, using the appropriate access hole on the crankcase cover;
– Align the top dead centre notch (TDC) “A” on the flywheel with the reference “B” on the left crankcase cover.

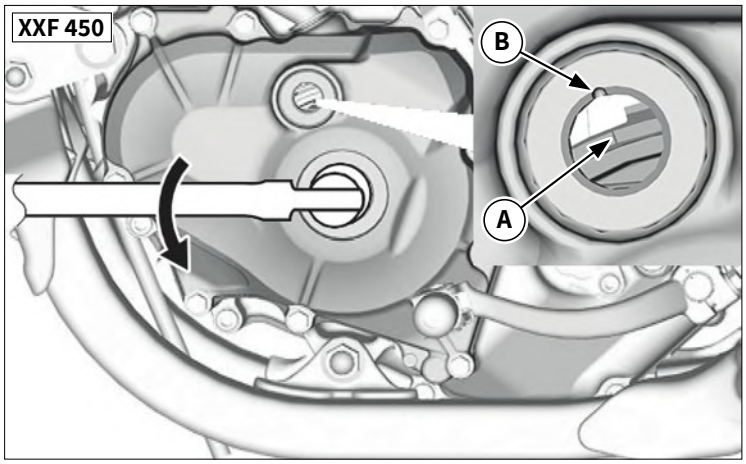

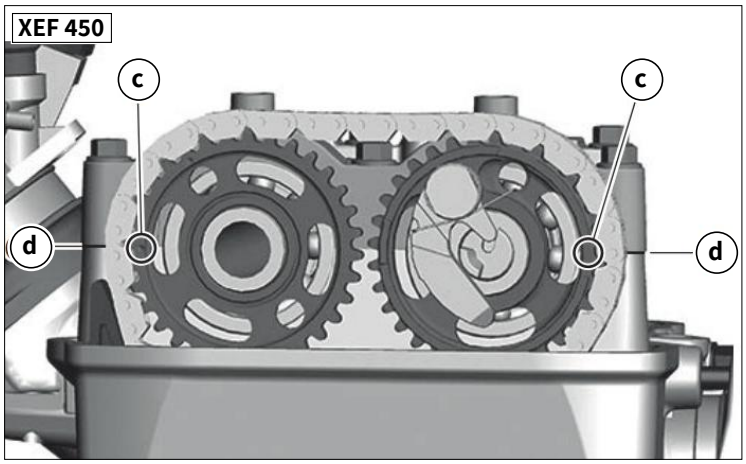

– Align the notches “c” of the exhaust and intake camshaft with the plane “d” of the camshaft supports.

⚠ **Align the crankshaft and camshaft references simultaneously. It is possible to be in a situation where the crankshaft is aligned with the references, while the camshafts are not. In this case it is necessary to make the crankshaft move one more complete revolution.**

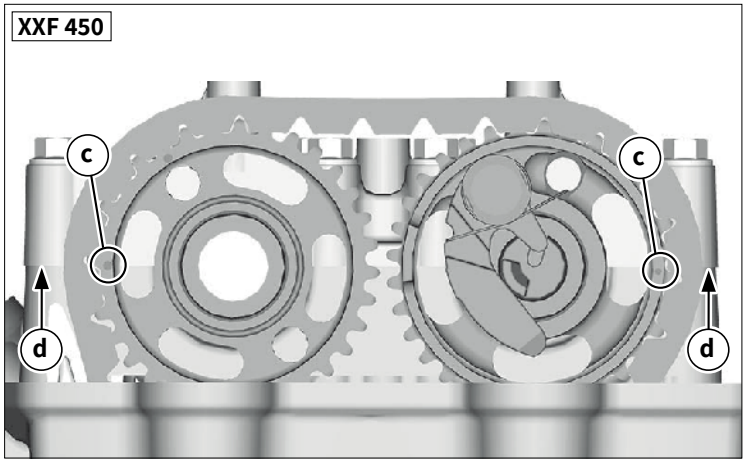

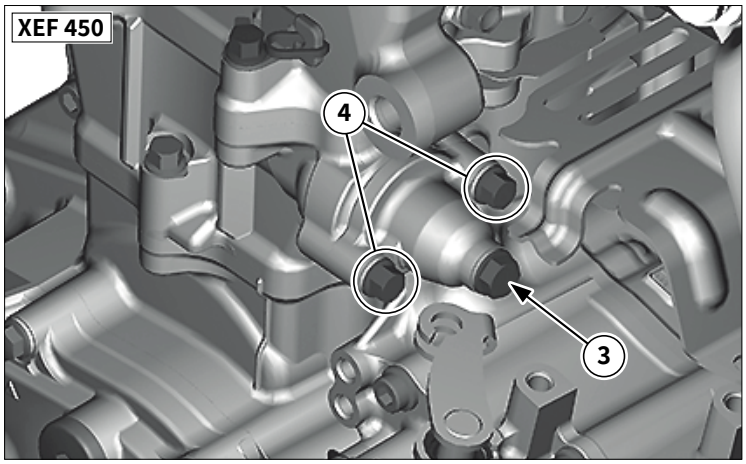

- Remove the timing chain tensioner cap “3”;
- Remove the timing chain tensioner fixing screws “4”, then remove the timing chain tensioner from the vehicle.

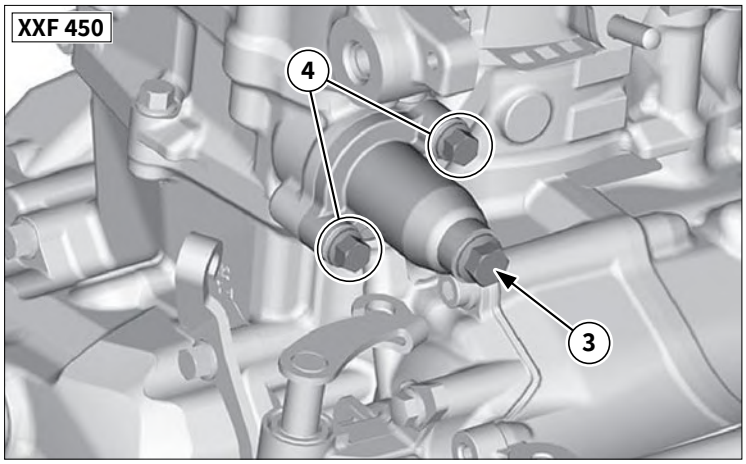

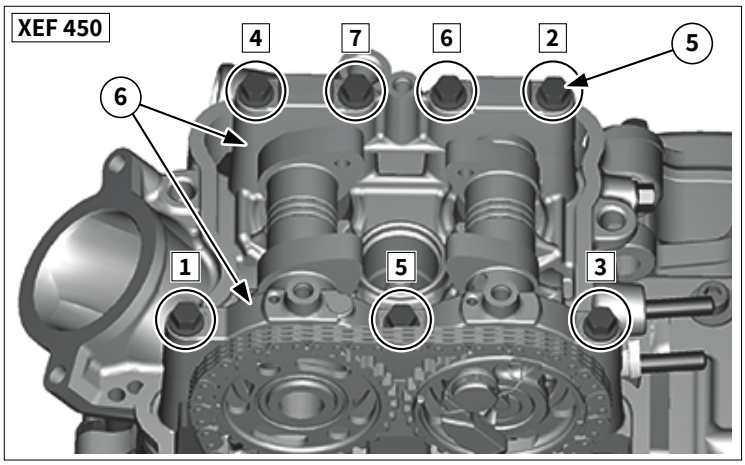

- Remove bolts “5” of the camshaft supports following a crossed pattern, starting from the outside to the inside;
- Remove the camshaft supports “6” from the head.

⚠ **The camshaft cap bolts must be removed evenly to prevent damage to the cylinder head, camshafts or camshaft caps.**

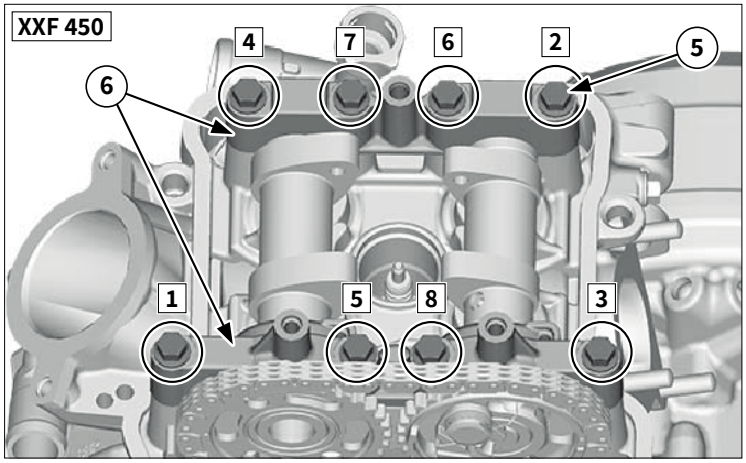

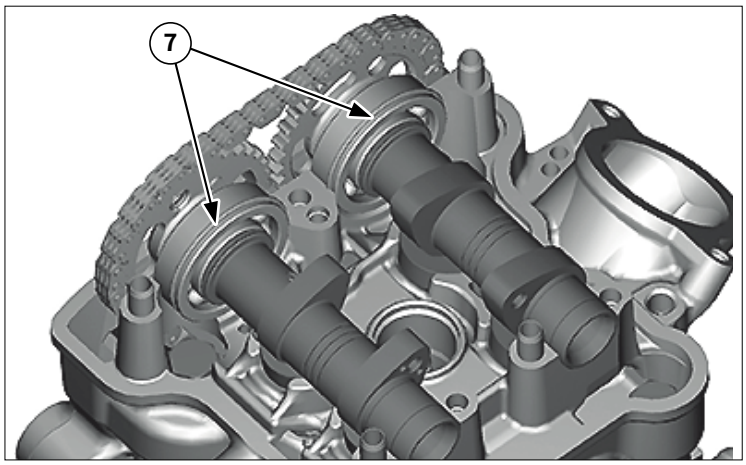

(For XXF 450 version only)

- Recover the guides “7” of the camshaft bearings, taking care not to drop them inside the engine.

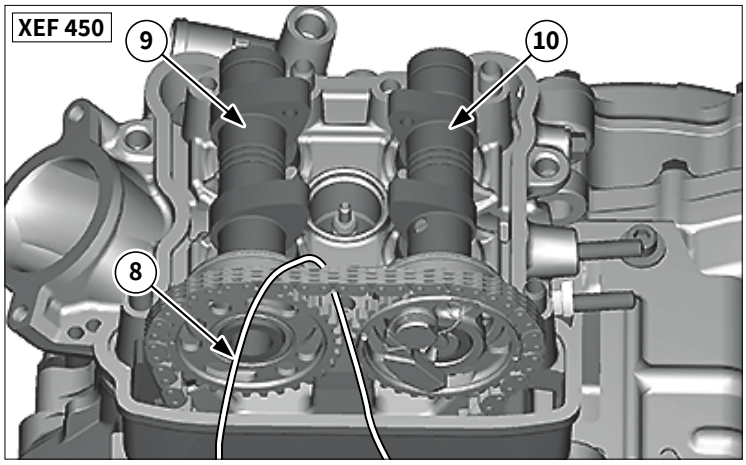

- Connect a metal wire “8” to the timing chain to prevent it from falling inside the engine, then pull it off the camshaft sprockets and tie it to the frame using the metal wire;
- Remove camshafts “9” and “10” from the head.

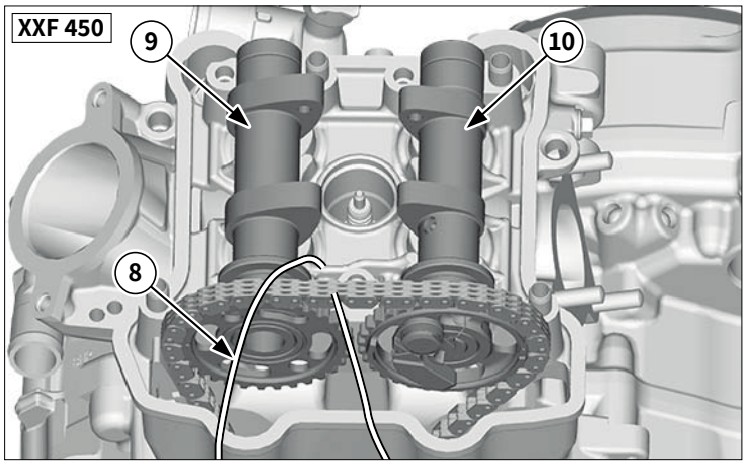

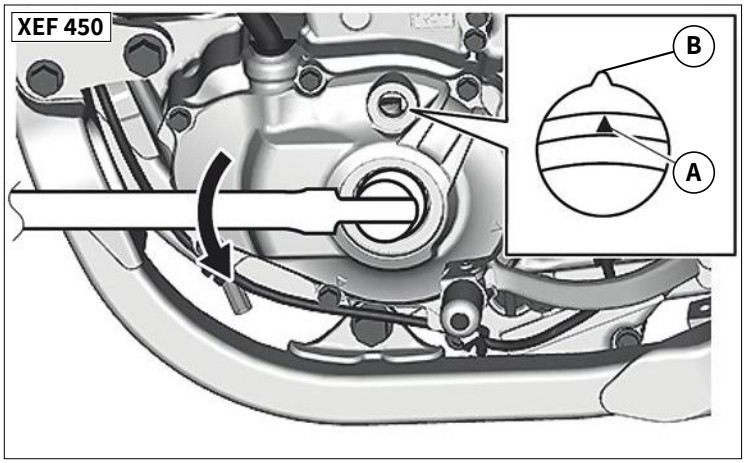

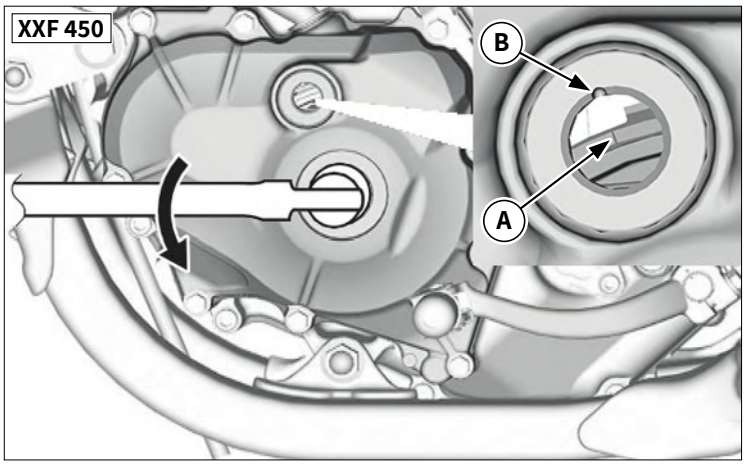

Installation (XXF 450 / XEF450 versions)

– Check that the top dead centre notch (TDC) “A” on the flywheel is aligned with the reference “B” on the left crankcase cover. If not, align it by turning the crankshaft counter-clockwise.

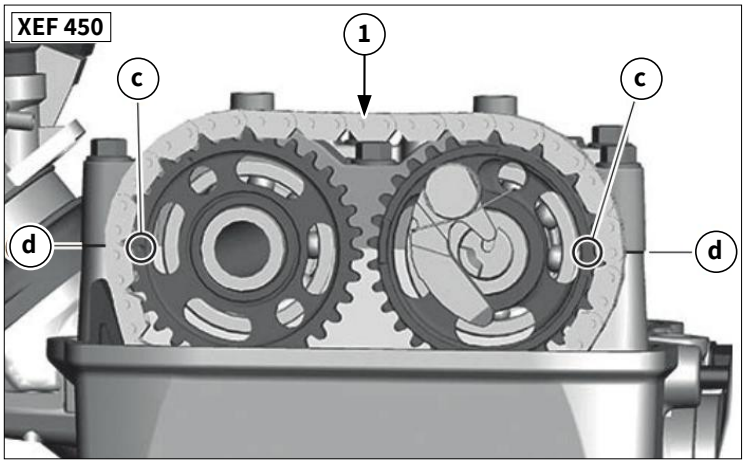

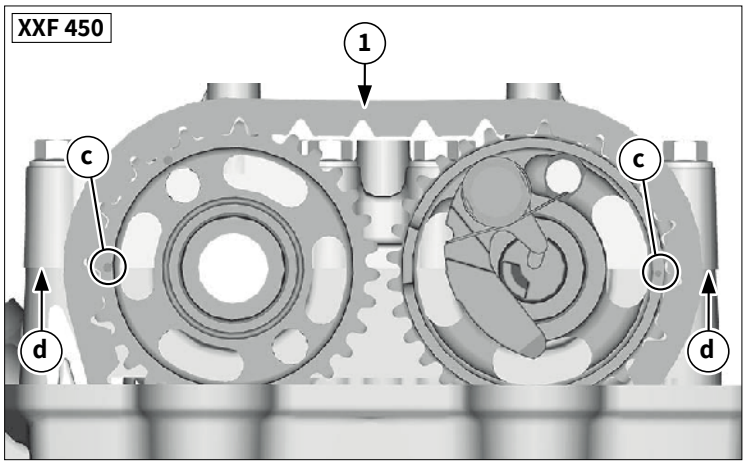

– Install the intake and exhaust camshafts in the head.
– Install the timing chain “1” on the sprockets of both camshafts. Make sure that notches “c” of the exhaust and intake camshafts are aligned with plane “d” of the camshaft supports.

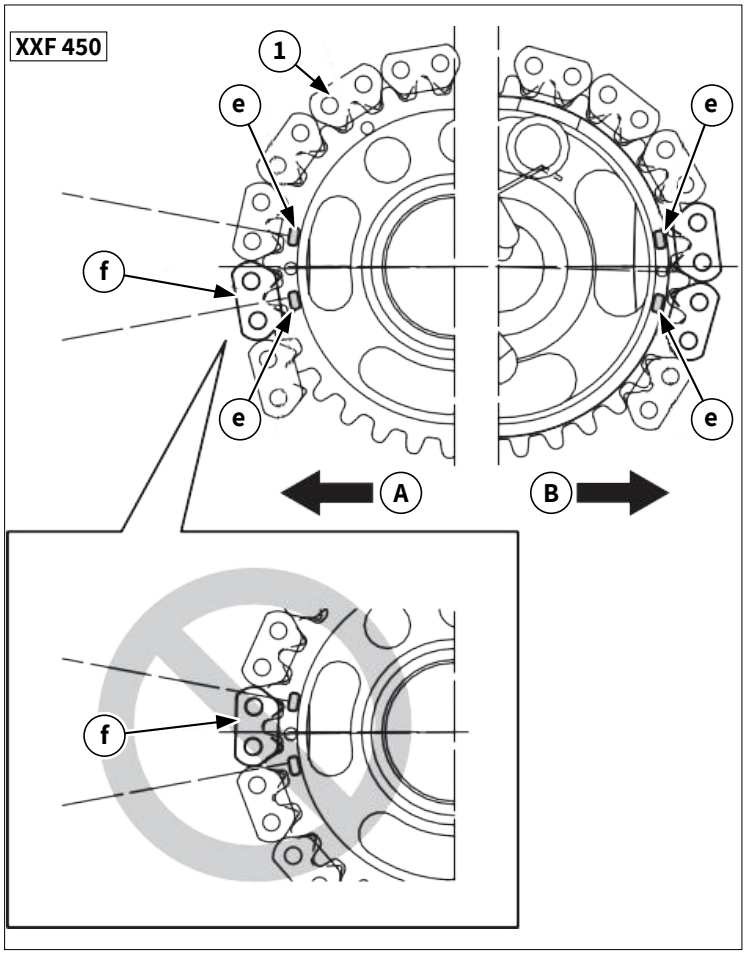

(For XXF 450 version only)

⚠ **Install it so that the references "e" of the camshaft pinions are in the centre of the links "f" of the timing chain. DO NOT install the chain so that the "e" reference marks are between two links of the timing chain.**

A: Intake side

B: Exhaust side

⚠ **When installing the camshafts and timing the engine, do not rotate the crankshaft. Damage and/or incorrect engine timing may occur.**

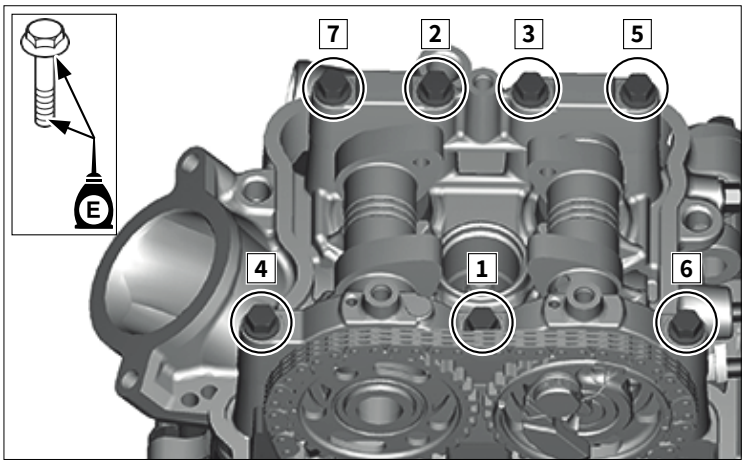

(XXF 450 / XEF 450 versions)

- Apply molybdenum disulphide grease to the sliding surfaces of the camshafts;
- Apply the engine oil on the decompression system.
- Install the camshaft bearing guides and camshaft supports;
- Apply engine oil to the threads and contact surfaces of the camshaft support bolts, install them and tighten them to the specified torque. Perform the tightening operation in two/three steps, following the diagram shown in the figure.

⚠ **The bolts of the camshaft supports must be tightened evenly to prevent damage to the camshaft head or camshaft supports.**

Camshaft support bolt:
10 Nm (1.0 m•kg 7.4 ft•lb)

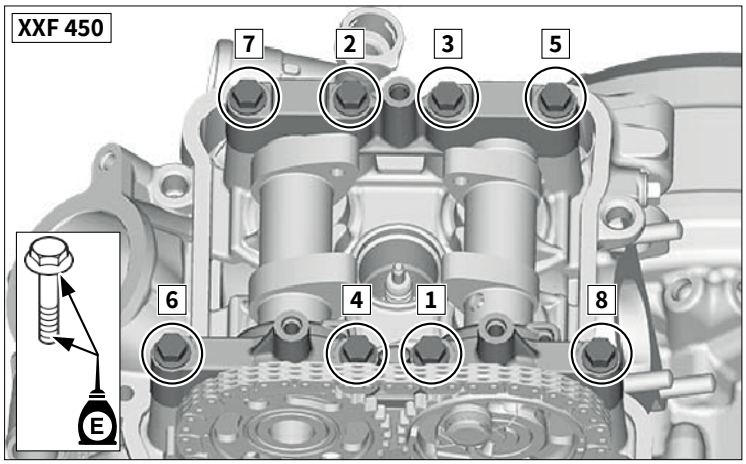

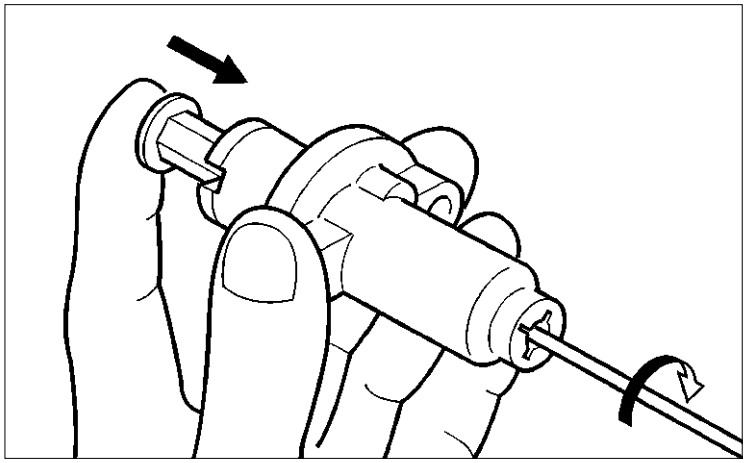

- Install the timing chain tensioner, operating as described below;
- Press the tensioner rod with your fingers at the same time, using a flat, thin-blade screwdriver, turn the rod clockwise until it is in the fully closed position.

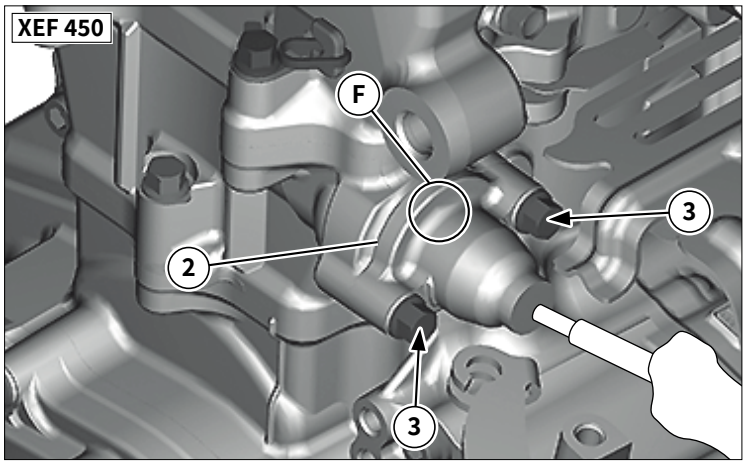

- Install a new gasket “2” in the housing on the cylinder;
- Keeping the rod completely closed, install the tensioner on the cylinder making sure that the UP reference “F” is facing upwards, then tighten the fastening bolts “3”.

Timing chain tensioner bolt:
10 Nm (1.0 m•kg 7.4 ft•lb)

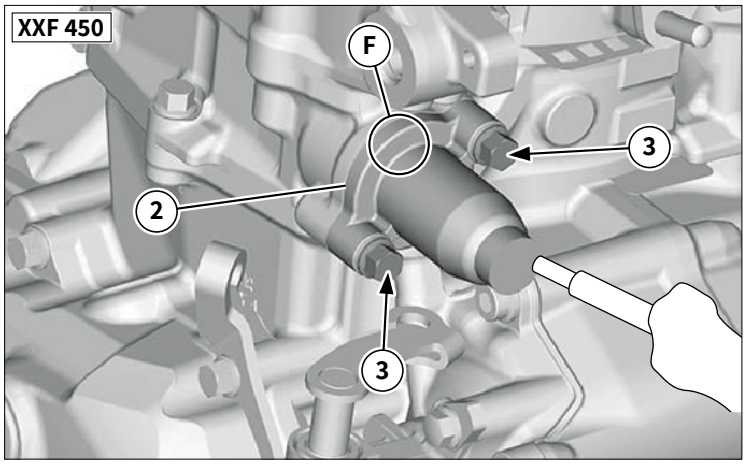

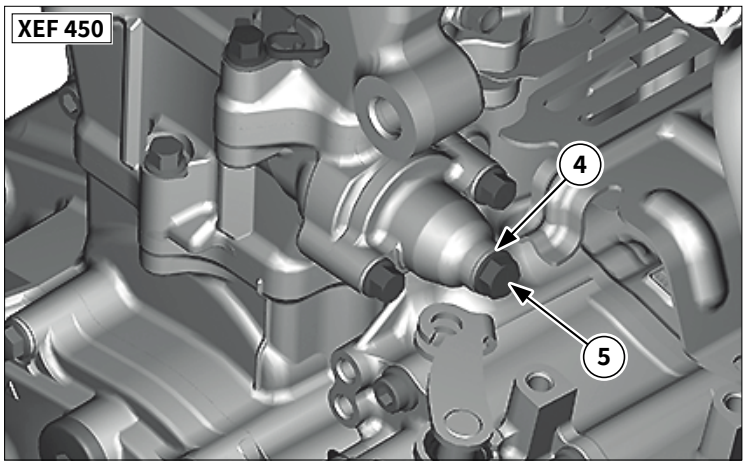

- Release the screwdriver and check that the tensioner rod comes out smoothly and easily;
- Install the gasket “4” and the timing chain tensioner cap “5”.

Timing chain tensioner cap:
6 Nm (0.6 m•kg 4.4 ft•lb)

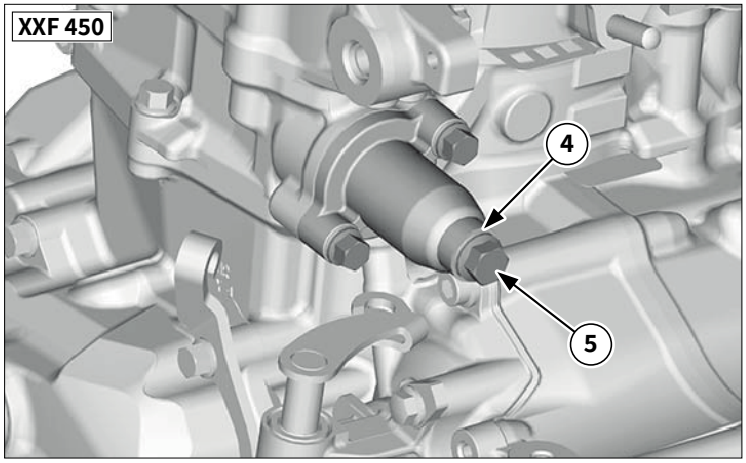

- Rotate the crankshaft counter-clockwise for several turns, checking that the movement is smooth and free of interference;
- Check that the crankshaft and camshaft references are correctly aligned with the references on the left crankcase cover and cylinder head;
- Refit the spark plug and valve cover.
- Reassemble: Fuel tank, air filter casing, right and left conveyors, seat.

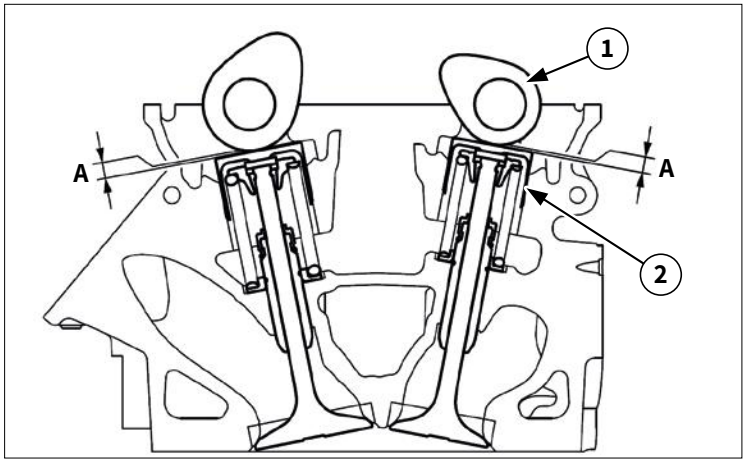

4.5 VALVE CLEARANCE

⚠ **Make sure that the valve clearance is controlled and/or adjusted when the engine is cold (ambient temperature).**

⚠ **While the valve clearance is checked and/or adjusted, ensure that the piston remains at the top dead centre (TDC).**

Check

- Remove: Seat, left and right conveyors, air filter casing, fuel tank;
- Remove spark plug and valve cover;
- Perform the engine timing operation (refer to section “4.4 Camshafts” on page 118);
- Measure the valve clearance “A” between the camshaft lobes “1” and the valve lifters “2”, using a thickness gauge “3”.
- If the clearance value of one or more valves is not within the standard values, proceed with the adjustment.

Intake valve clearance (XXF 250 / XEF 250): 0.12 - 0.19mm (0.0047 – 0.0075 in)

Intake valve clearance (XXF 450 / XEF 450): 0.10 - 0.17mm (0.0039 – 0.0067 in)

Exhaust valve clearance (XXF 250 / XEF 250): 0.17 – 0.24mm (0.0067 – 0.0094 in)

Exhaust valve clearance (XXF 450 / XEF 450): 0.15 – 0.22mm (0.0059 – 0.0087 in)

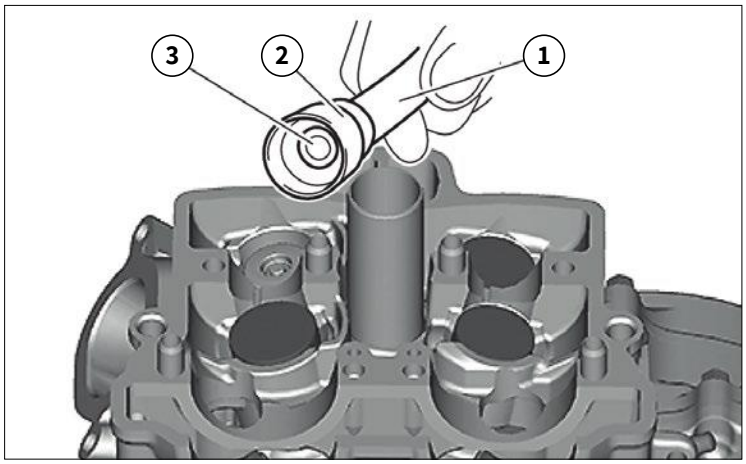

Adjustment

- Check that the crankshaft and camshaft references are correctly aligned with the references on the left crankcase cover and cylinder head;
- Remove the camshafts (refer to section “4.4 Camshafts” on page 118);
- Remove the valve lift “2” and the adjustment plate “3”, relative to the valve to be adjusted, using a magnet “1”.

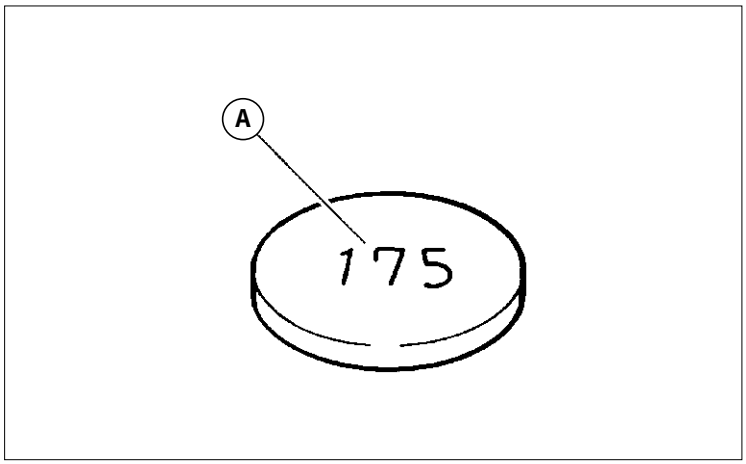

- Check the thickness of the adjustment plate by checking the value “A” on the upper wall of the plate. If the value “A” cannot be read, measure the thickness of the plate with a micrometer.
- Choose the thickness of the new plate to be installed according to the following formula:

A=(B-C) + D

A. New plate thickness;
B. Valve clearance detected;
C. Valve clearance specified;
D. Old plate thickness.

Last digit of pad number	Rounded value
0	0
1	0
2	0
4	5
5	5
6	5
8	10
9	10

There are 25 types of adjusting pads, ranging from 1.20 mm (0.0472 in) to 2.40 mm (0.0945 in), in increments of 0.05 mm (0.0020 in).

For the value of the originally installed plates, convert the last digit of the value according to the following table.
Example:
Plate number = 148 / Rounded value =150

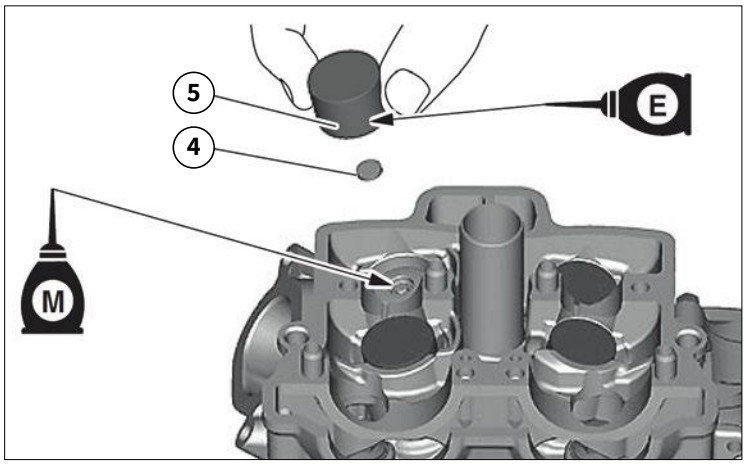

– Install the new adjustment plates “4” and valve lifters “5” on the relevant valves.

DO NOT force plates and/or valve lifters into their housings during installation.

Apply molybdenum disulphide grease on the end of the valve stems and related plates.

Install the plates with the values facing upwards.

Apply engine oil to the valve lifters and check that they move freely when rotated.

– Install the camshafts (refer to section “4.4 Camshafts” on page 118);
– Reassemble the spark plug and valve cover;
– Reassemble: Fuel tank, air filter casing, right and left conveyors, seat.

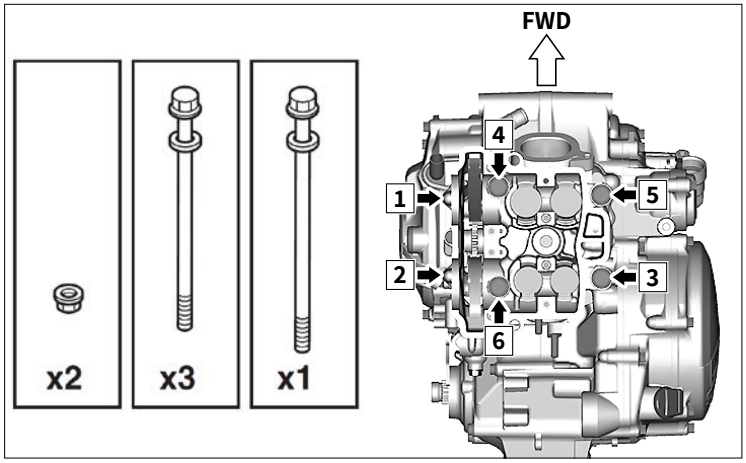

4.6 CYLINDER HEAD

Removal (XXF 250 / XEF 250 versions)

- Remove: Seat, left and right conveyors, air filter casing, fuel tank;
- Remove the spark plug and valve cover;
- Remove the camshafts (refer to chapter “4.4 Camshafts” on page 118);
- Remove the nuts and bolts securing the head to the cylinder;

Loosen the bolts ½ turn at a time, following the sequence shown in the figure.

- Remove the bolts after having completely loosened each one.

M9 x 135mm (5.31 in): “4”, “5”, “6”

M9 x 145mm (5.71 in): “3”

- Remove head “1” from the cylinder, gasket “2”, centering pins “3” and timing chain guide “4”;

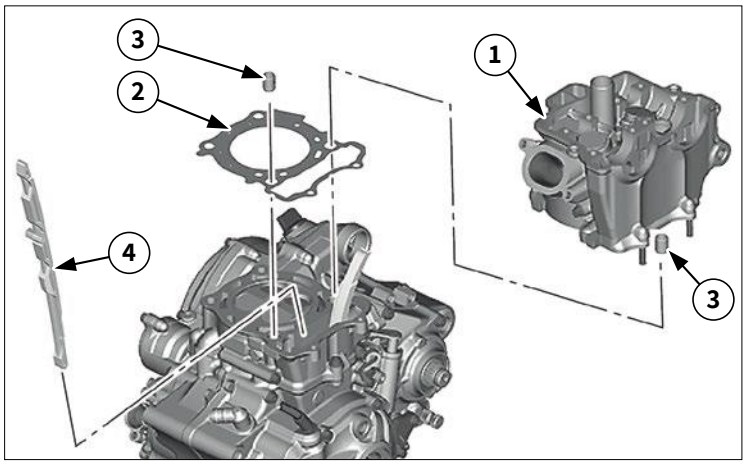

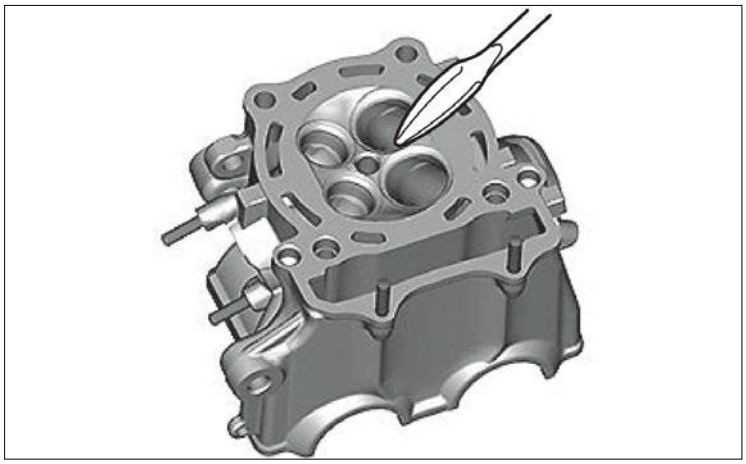

Check (XXF 250 / XEF 250 versions)

- Remove carbon deposits using a rounded scraper;

Take care to avoid damaging the spark plug threads. Do not use a sharp instrument. Avoid scratching the aluminum.

- Check the head for damage and/or cracks, if any, replace the head;
- Check the water circuit, if there is encrustation and/or rust replace the head;
- Measure the deformation of the head, if it does not conform to specifications, level the head.

Maximum permissible deformation:
0.05 MM (0.0020 in)

If it is necessary to replace the head, the valves must also be replaced.

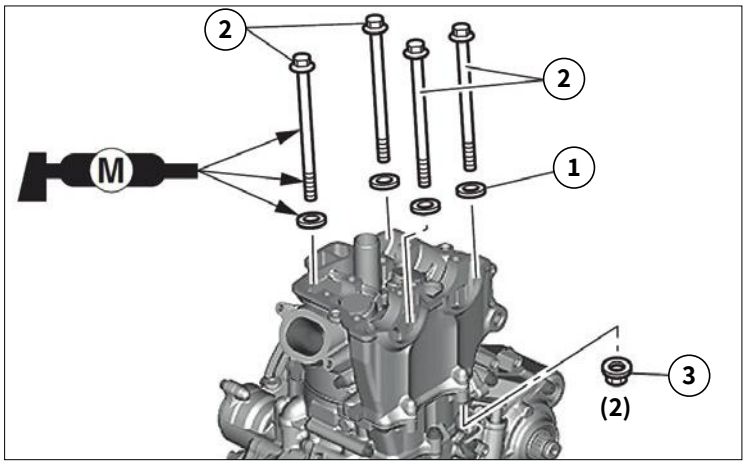

Installation (XXF 250 / XEF 250 versions)

- Wash the threads and contact surfaces of bolts, washers, head/cylinder contact surface and crankcase threads;
- Install the gasket, centering pins, timing chain guide and head;
- Apply molybdenum disulphide grease to the threads and contact surfaces of the bolts and washers;
- Install washers “1”, bolts “2” and nuts “3”.

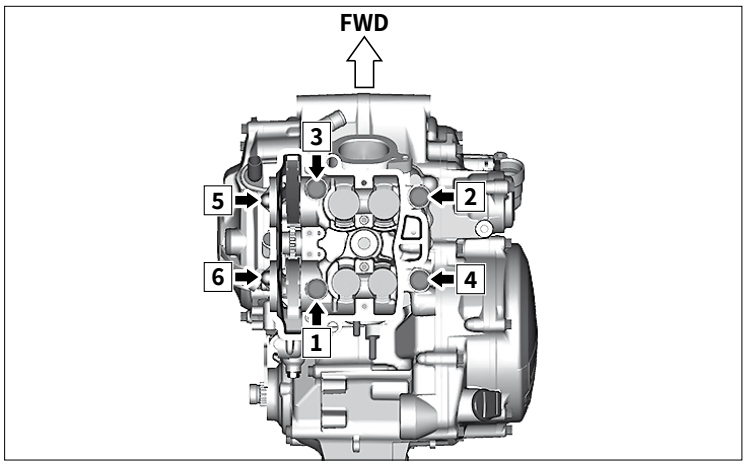

The head bolts tightening must be completed in four steps, as described below:

1st Phase

– Tighten the head bolts to the specified torque by performing the operation in two/three steps, following the diagram shown in the figure.

Head bolts "1" – "4":
30 Nm (3.0 m•kg, 22 ft•lb)

2nd Phase

– Remove a single bolt, following the tightening order;
– Apply molybdenum disulphide grease again to the thread and contact surface of the bolt and washer;
– Tighten the bolt to the specified torque;

Head bolts "1" – "4":
15 Nm (1.5 m•kg, 11 ft•lb)

Perform the 2nd Phase operations one bolt at a time. Remove the bolts in the order used for tightening, then tighten them according to the new tightening torque.

3rd Phase

– Using a marker pen, mark a reference between bolt "1" and head "2";

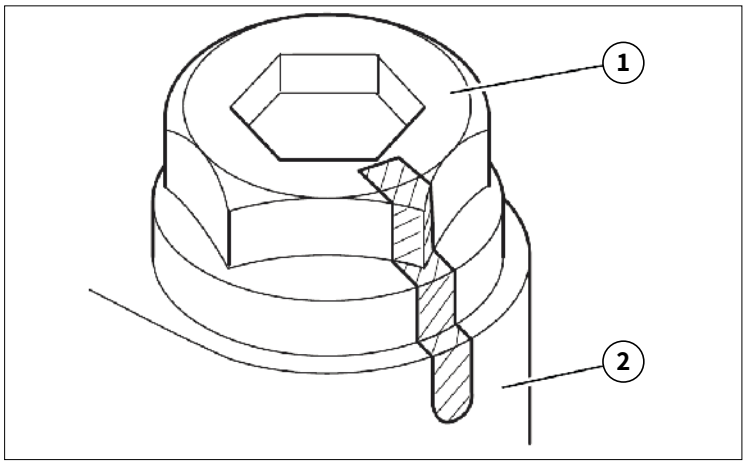

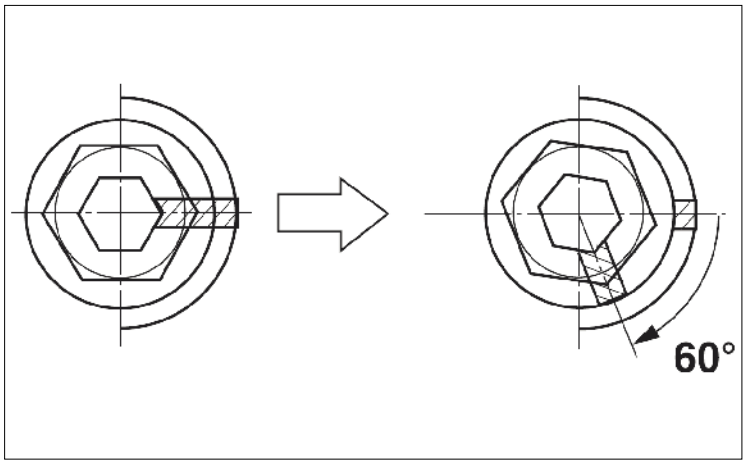

– Tighten each bolt by turning it 60° with respect to the initial reference, following the 1st Phase tightening order;

Head bolts "1" – "4":
Specified angle = 60°

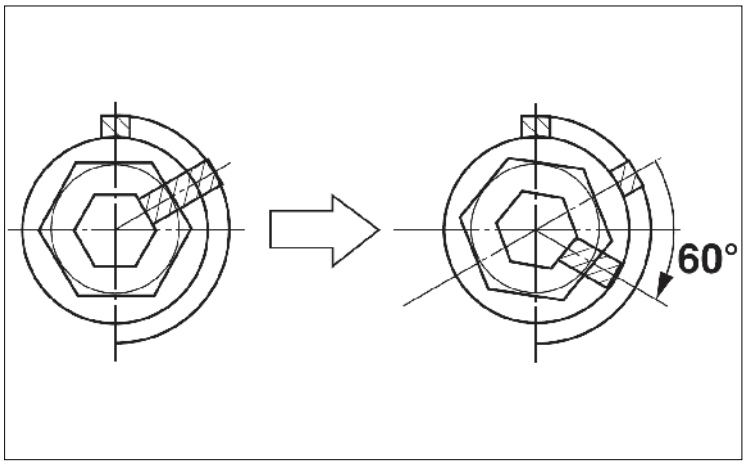

4th Phase

– Mark a second reference between the bolt and the head, then tighten each bolt by a further 60° following the tightening order of the 1st Phase;

Head bolts "1" – "4":
Specified angle = 60°

– Tighten the nuts "5" and "6" to the specified torque.

Nuts "5" – "6":
10 Nm (1.0 m•kg, 7.4 ft•lb)

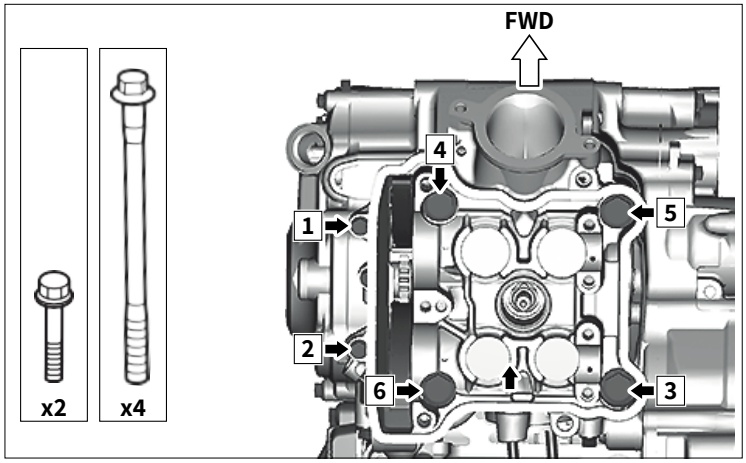

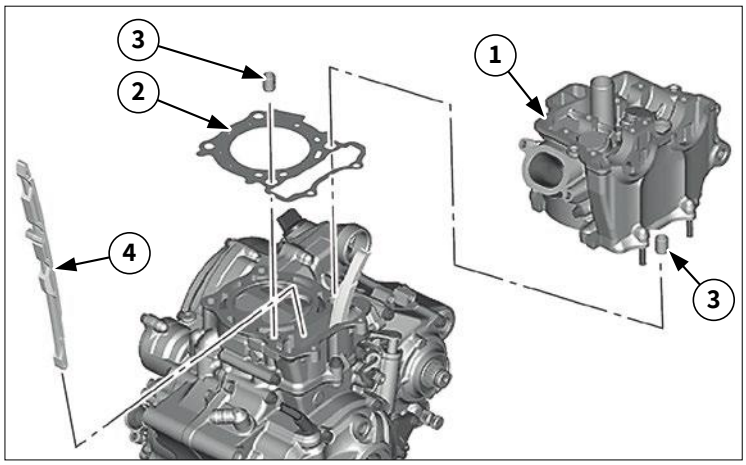

Removal (XEF 450 version)

- Remove: Seat, left and right conveyors, air filter casing, fuel tank;
- Remove the spark plug and valve cover;
- Remove the camshafts (refer to chapter ”4.4 Camshafts” on page 118);
- Remove the nuts and bolts securing the head to the cylinder;

ⓘ **Loosen the bolts ½ turn at a time, following the sequence shown in the figure.**

- Remove the bolts after having completely loosened each one.

M6 x 35 mm (1.38 in): “1”, “2”,

M10 x 149 mm (5.87 in): “3”, “4”, “5”, “6”

- Remove head “1” from the cylinder, gasket “2”, centering pins “3” and timing chain guide “4”;

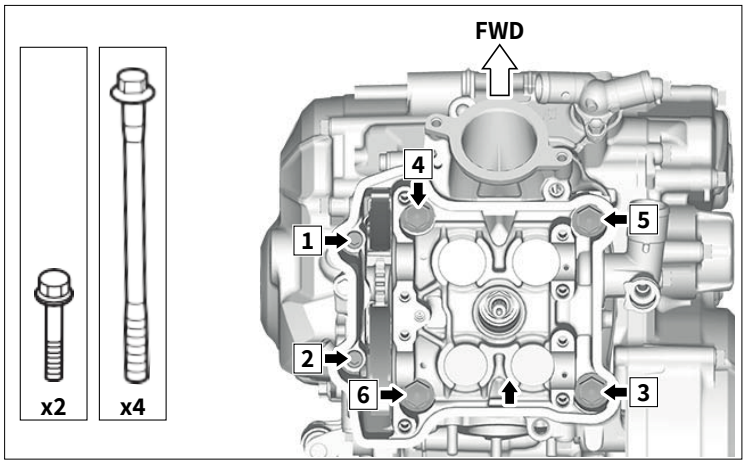

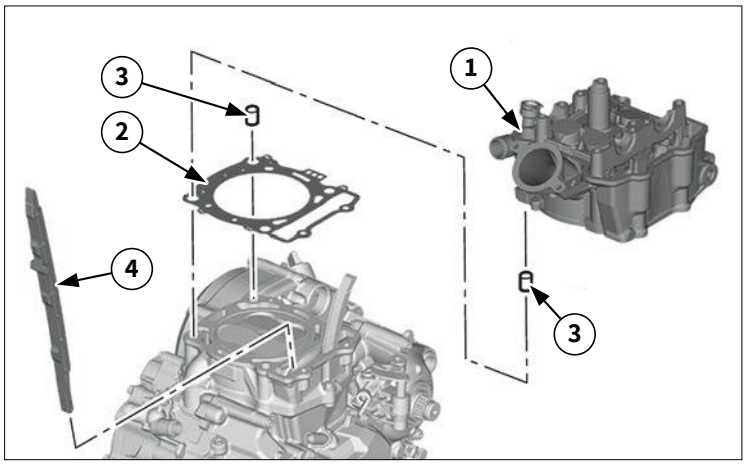

Removal (XXF 450 version)

- Remove: Seat, left and right conveyors, air filter casing, fuel tank;
- Remove the spark plug and valve cover;
- Remove the camshafts (refer to chapter ”4.4 Camshafts” on page 118);
- Remove the nuts and bolts securing the head to the cylinder;

ⓘ **Loosen the bolts ½ turn at a time, following the sequence shown in the figure.**

- Remove the bolts after having completely loosened each one.

M6 x 45 mm (1.77 in): “1”, “2”,

M10 x 129 mm (5.08 in): “3”, “4”, “5”, “6”

- Remove head “1” from the cylinder, gasket “2”, centering pins “3” and timing chain guide “4”;

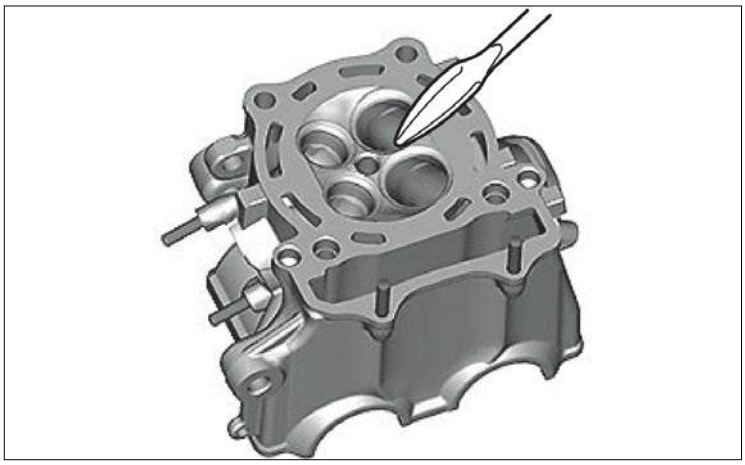

Check (XXF 450 / XEF 450 versions)

– Remove carbon deposits using a rounded scraper;

⚠ **Take care to avoid damaging the spark plug threads. Do not use a sharp instrument. Avoid scratching the aluminum.**

– Check the head for damage and/or cracks, if any, replace the head;
– Check the water circuit, if there is encrustation and/or rust replace the head;
– Measure the deformation of the head, if it does not conform to specifications, level the head.

Maximum permissible deformation:
0.05 MM (0.0020 in)

ⓘ **If it is necessary to replace the head, the valves must also be replaced.**

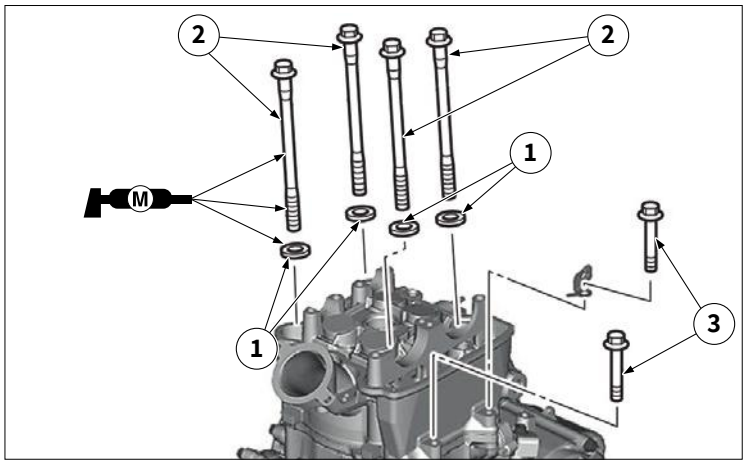

Installation (XXF 450 / XEF 450 versions)

– Wash the threads and contact surfaces of bolts, washers, head/cylinder contact surface and crankcase threads;
– Install the gasket, centering pins, timing chain guide and head;
– Apply molybdenum disulphide grease to the threads and contact surfaces of the bolts and washers;
– Install washers “1”, bolts “2” and nuts “3”.

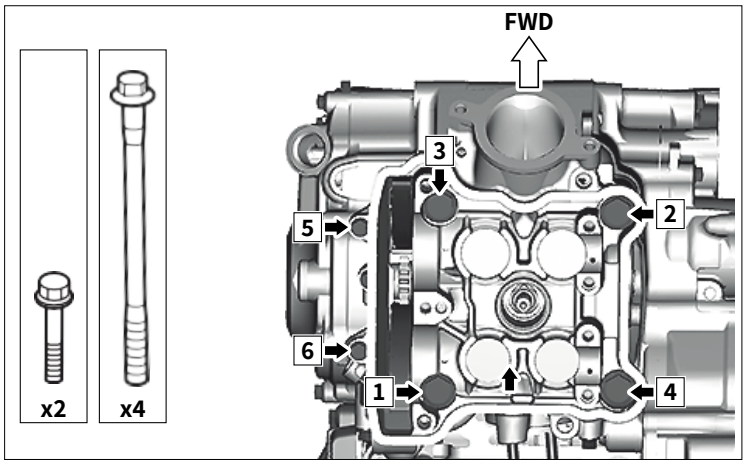

(XEF 450 version)

The head bolts tightening must be completed in four steps, as described below:

1st Phase

– Tighten the head bolts to the specified torque by performing the operation in two/three steps, following the diagram shown in the figure.

Head bolts “1” – “4”:
30 Nm (3.0 m•kg, 22 ft•lb)

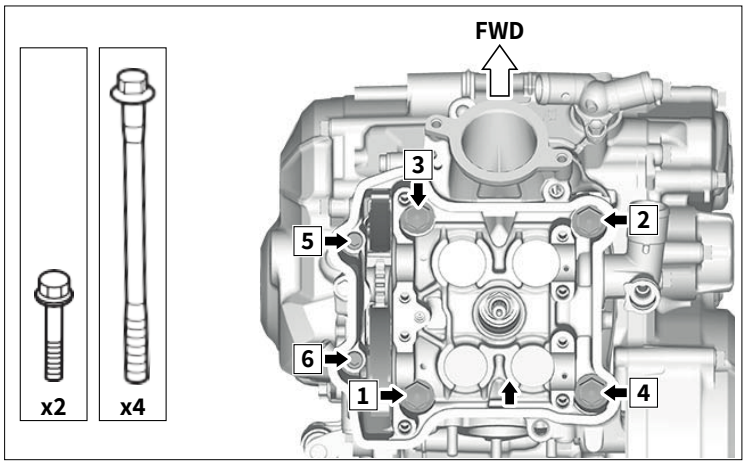

(XXF 450 version)

The head bolts tightening must be completed in four steps, as described below:

1st Phase

– Tighten the head bolts to the specified torque by performing the operation in two/three steps, following the diagram shown in the figure.

Head bolts “1” – “4”:
36 Nm (3.6 m•kg, 27 ft•lb)

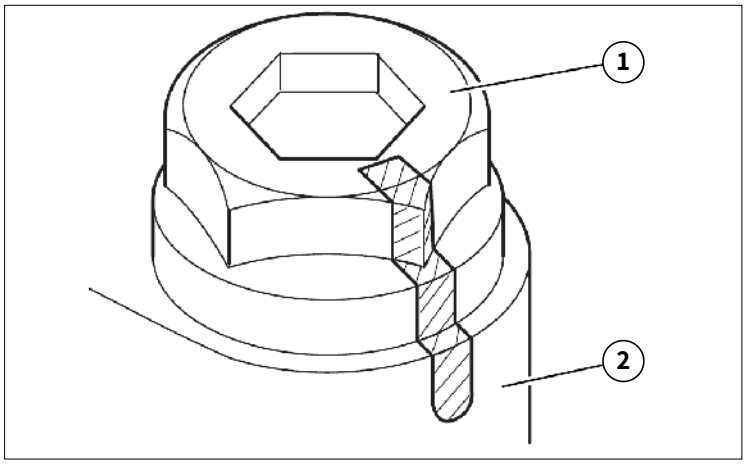

2nd Phase

- Remove bolt “1”;
- Apply molybdenum disulphide grease again to the thread and contact surface of the bolt and washer;
- Tighten the bolt to the specified torque;

(XEF 450 version)

Head bolts “1”:
23 Nm (2.3 m•kg, 17 ft•lb)

(XXF 450 version)

Head bolts testa “1”:
18 Nm (1.8 m•kg, 13 ft•lb)

- Using a marker pen, mark a reference between bolt “1” and head “2”;

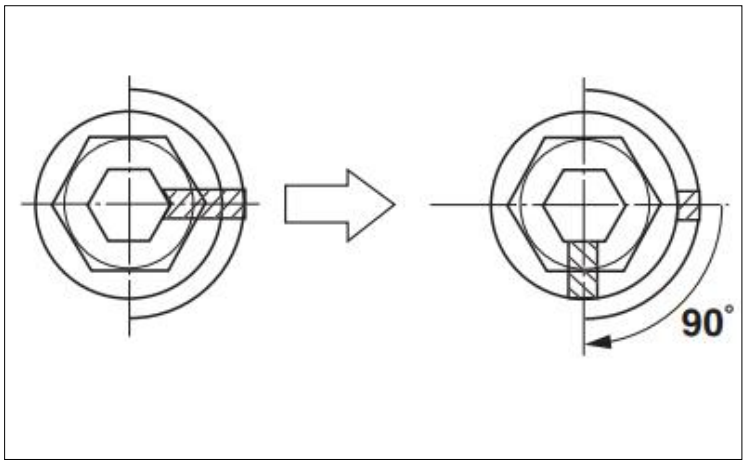

- Tighten the bolt by turning it 90° in relation to the initial reference;

Head bolt “1”:
Specified angle = 90°

- Repeat steps 2 operations for bolts “2”, “3”, “4”;

Perform the 2nd Phase operations one bolt at a time. Remove the bolts in the order used for tightening, then tighten them according to the new tightening torque.

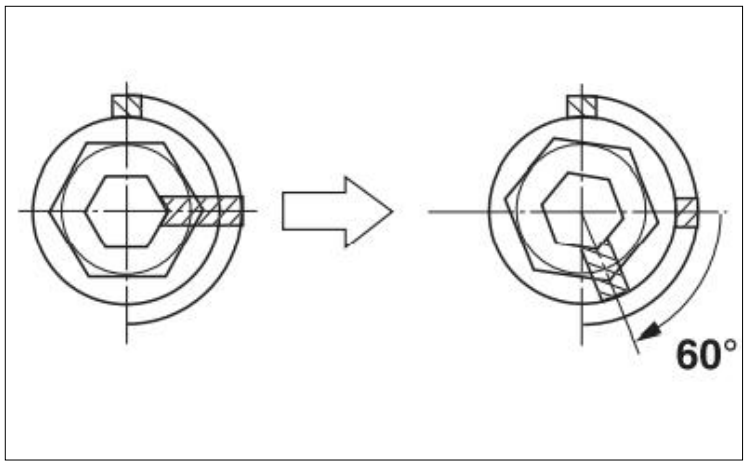

3rd Phase

- Mark a second reference between the bolt and the head, then tighten each bolt by a further 60° following the tightening order of the 1st Phase;

Head bolts “1” – “4”:
Specified angle = 60°

- Tighten bolts “5” and “6” to the specified torque.

(XEF 450 version)

Head bolts “5” – “6”:
10 Nm (1.0 m•kg, 7.4 ft•lb)

(XXF 450 version)

Head bolts “5” – “6”:
12 Nm (1.2 m•kg, 8.9 ft•lb)

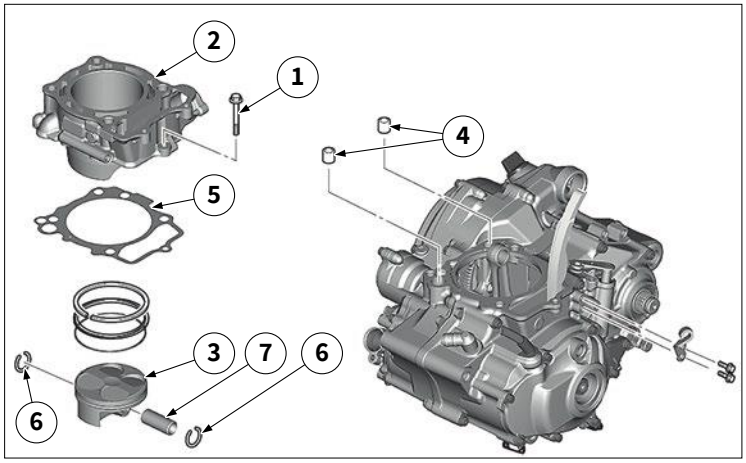

4.7 CYLINDER AND PISTON

Removal

- Remove the head (refer to section “4.6 Cylinder head” on page 131);
- Remove cylinder bolts “1” on the timing chain side, then remove cylinder “2” from piston “3” and remove it from the vehicle. Retrieve the centring bushings “4” and remove the gasket “5”.
- Remove seeger “6”, pin “7” and piston “3” from the connecting rod.

Before removing the seeger, cover the crankcase with a clean cloth to prevent it from falling into it.

Do not use a hammer to pull out the pin, in case the operation is difficult to use a special puller.

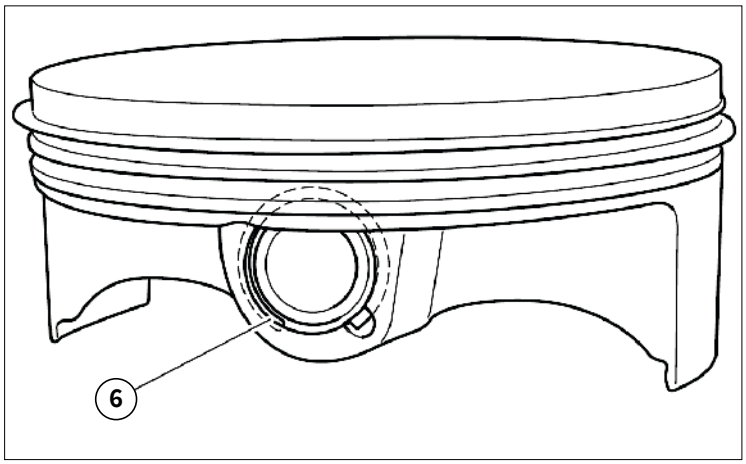

Cylinder check

- Remove carbon deposits using a rounded scraper;

Do not use a sharp instrument. Avoid scratching the aluminum.

- Check the internal surface of the cylinder, if damaged, grind or replace;

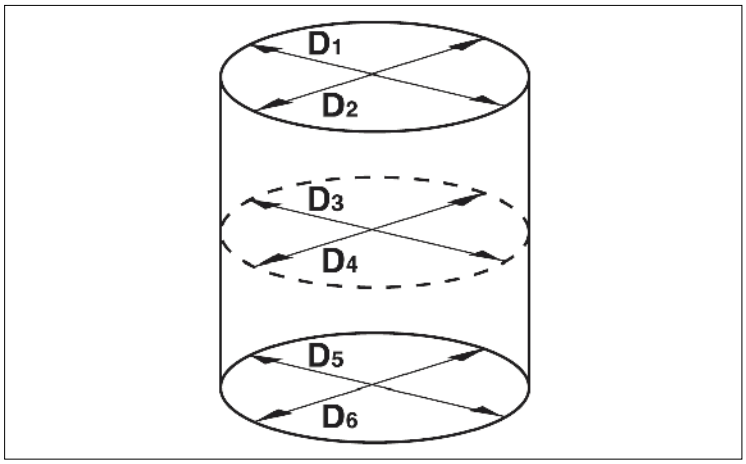

- Measure the cylinder bore in parallel (D1, D3, D5) to and at right angles to the crankshaft (D2, D4, D6).
- Then, find the average of the measurements.

Bore (XXF 250 / XEF 250):
Standard = 77.000 – 77.010mm (3.0315 – 3.0319 in)
Wear limit = 77.060mm (3.0339 in)

Bore (XXF 450 / XEF 450):
Standard = 97.000 – 97.010mm (3.8189 – 3.8193 in)
Wear limit = 97.060mm (3.8213 in)

If the bore does not comply with the specifications, re-measure or replace the cylinder, piston and piston rings all together.

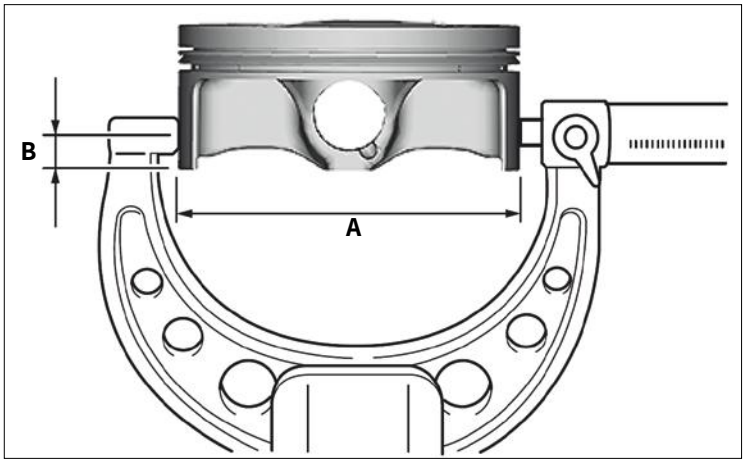

Piston check

– Measure the outside diameter of piston “A” in measuring position “B” using the micrometer.

Piston diameter (XXF 250 / XEF 250): 76.955 – 76.970mm (3.0297 – 3.0303 in)

Measuring point “B” (from the lower side of the piston skirt) (XXF 250 / XEF 250): 4.0mm (0.16 in)

Piston diameter (XXF 450 / XEF 450): 96.955 – 96.970mm (3.8171 – 3.8177 in)

Measuring point “B” (from the lower side of the piston skirt) (XXF 450 / XEF 450): 9.0mm (0.35 in)

4

If the diameter does not comply with the specifications, replace the cylinder, piston and segments all together.

– Finally, calculate the clearance between cylinder and piston: Clearance = Cylinder “C” bore - Piston diameter

Clearance between piston and cylinder (XXF 250 / XEF 250): 0.030 – 0.055mm (0.0012 – 0.0022 in)

Clearance between piston and cylinder (XXF 450 / XEF 450): 0.010 – 0.045mm (0.0004 – 0.0018 in)

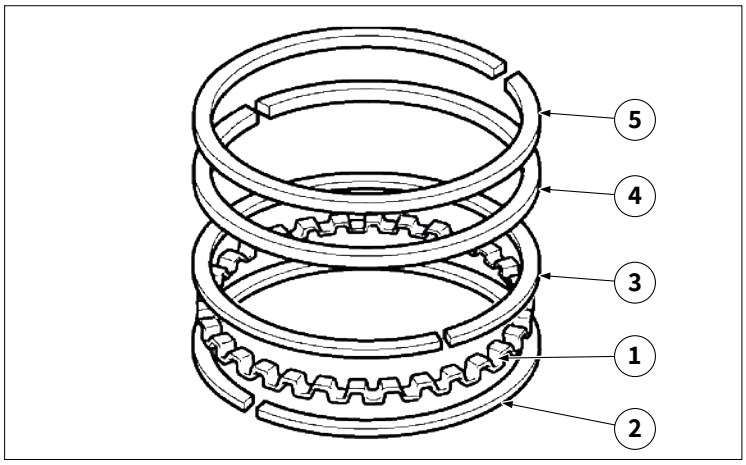

Installation

– Install in the lower piston housing: scraper ringband expander “1”, lower scraper ring band light “2”, scraper ring band light “3”;
– Install segment “4” in the upper (XXF250 / XEF 250) or intermediate (XXF 450 / XEF 450) piston seat;
– Install segment “5” in the upper seat (XXF 450 / XEF 450 ONLY) of the piston;

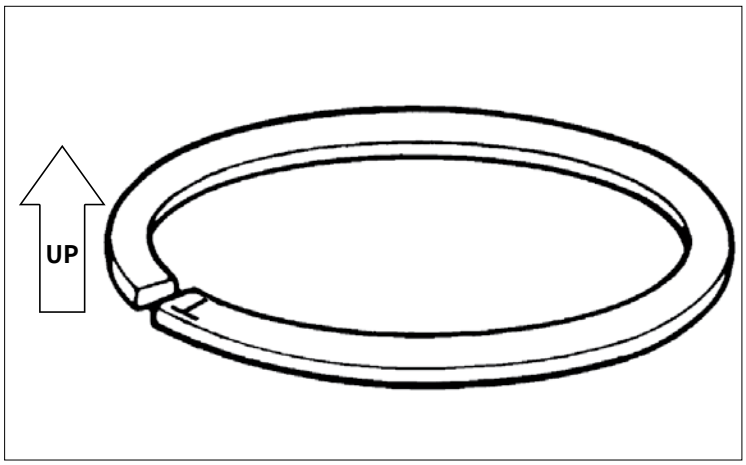

Make sure to install the segment(s) so that the reference, or manufacturer’s numbers, are facing upwards.

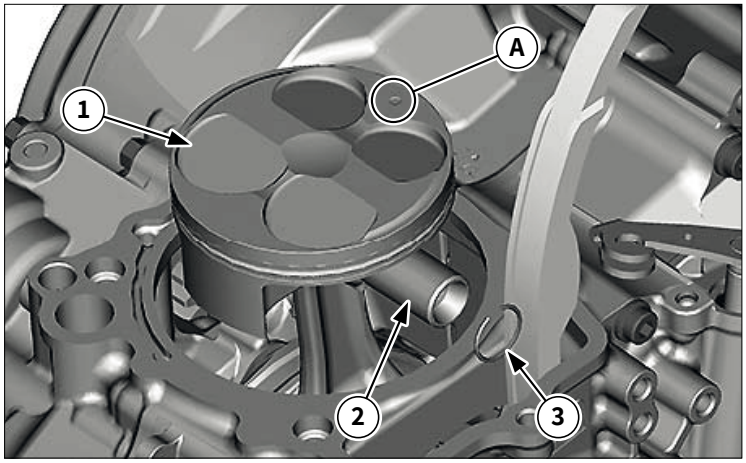

– Lubricate piston “1” and pin “2” then install them on the connecting rod. Make sure that the piston reference “A” is facing the exhaust (rear side of the vehicle).

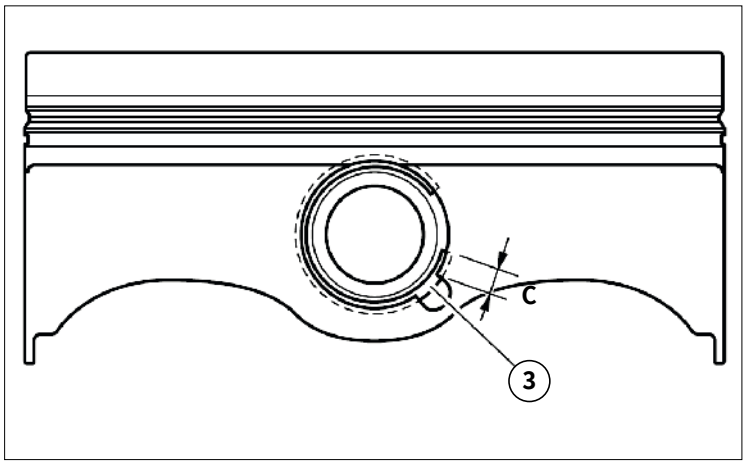

– Install seeger “3” in the relative housings on the piston;

Make sure that the end of the seeger “C” is not near the notches in the piston.

– Install the centering pins, gasket and cylinder previously lubricated with engine oil;
– Install the cylinder bolt on the timing chain side;

Cylinder bolt: 10 Nm (1.0 m•kg, 7.4 ft•lb)

While compressing the piston rings with one hand, install the cylinder with the other hand.

– Pass the timing chain and its slider (exhaust side) through the timing chain housing.

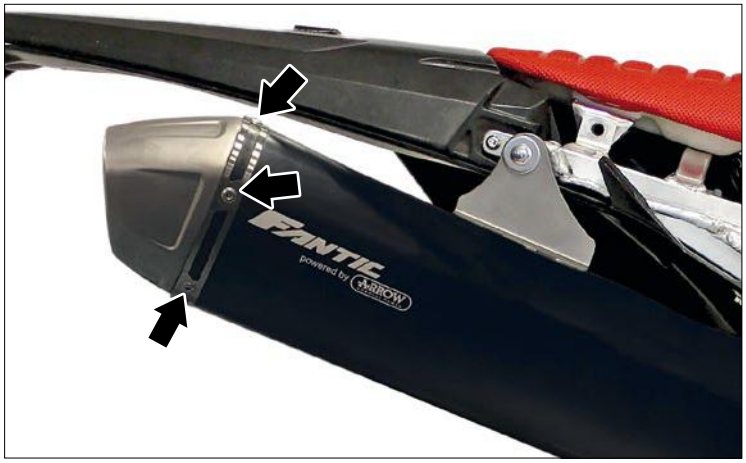

4.8 SOUNDPROOFING

– Remove the fixing rivets (no. 6) of the bottom cover, then remove the cover from the silencer;

– Remove the end cap from the silencer and remove the soundproofing cartridge inside it;

– Insert a new cartridge, then replace the end cap on the silencer;
– Refit the cover and secure the cover/end cap/silencer assembly with new breakstem rivets.

ⓘ **A correct and regular maintenance of the soundproofing element guarantees the best performance of the vehicle and allows it to be driven on the road and/or in approved circuits.**

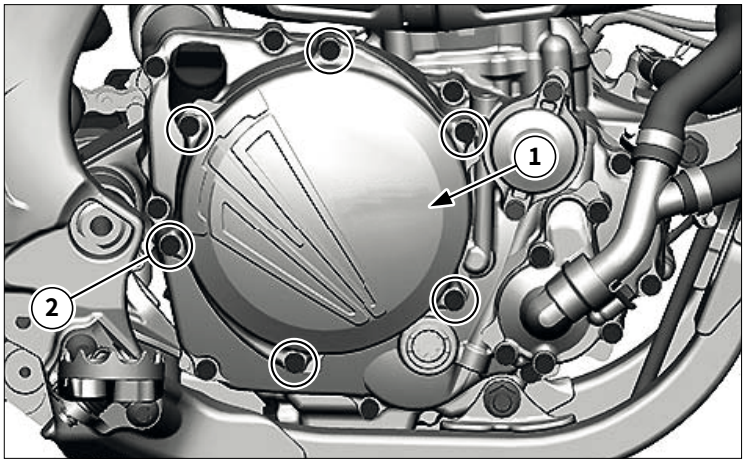

4.9 CLUTCH

Clutch removal (XXF 250 / XEF 250 / XEF 450 versions)

– Remove the clutch crankcase bolts “2” following a cross pattern, then remove the crankcase “1”;

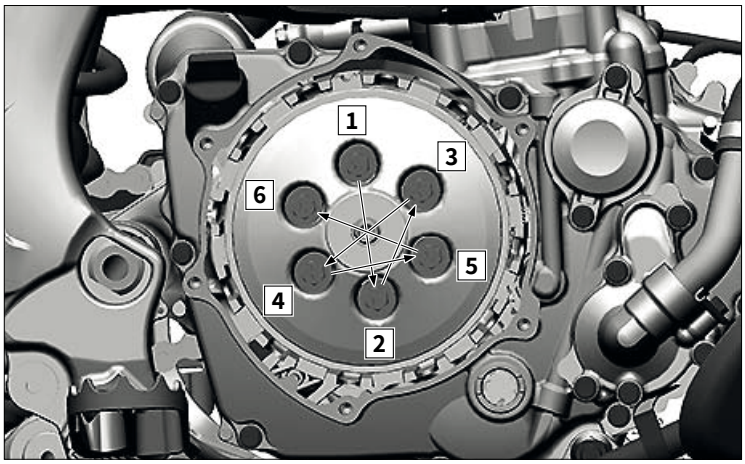

– Remove the clutch bolts and springs following a cross pattern;

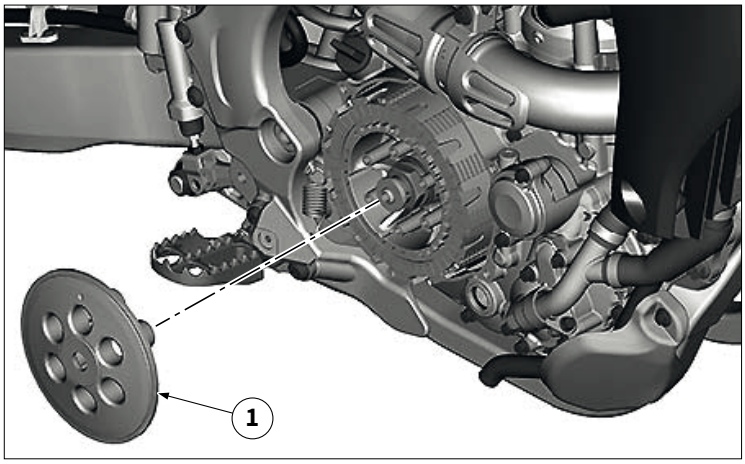

– Remove the pressure plate “1”;

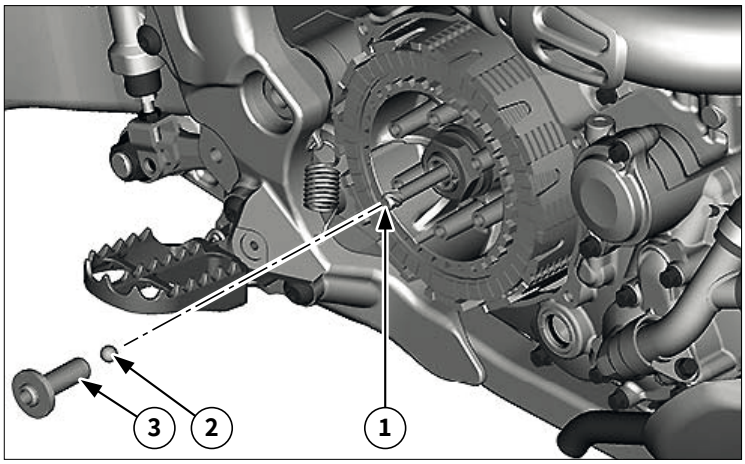

– Remove the thrust bearing “1”, the ball “2” and the thrust rod “3”;
– Remove the plates from the clutch;

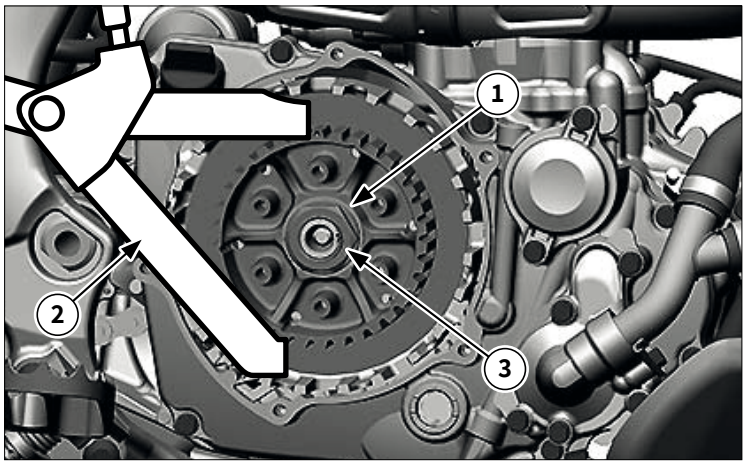

- Bend the tab of the clutch hub nut lock washer (XXF 450 / XEF 450 ONLY);
- Lock the clutch hub “1” with the universal locking tool “2” and unscrew the nut “3”;

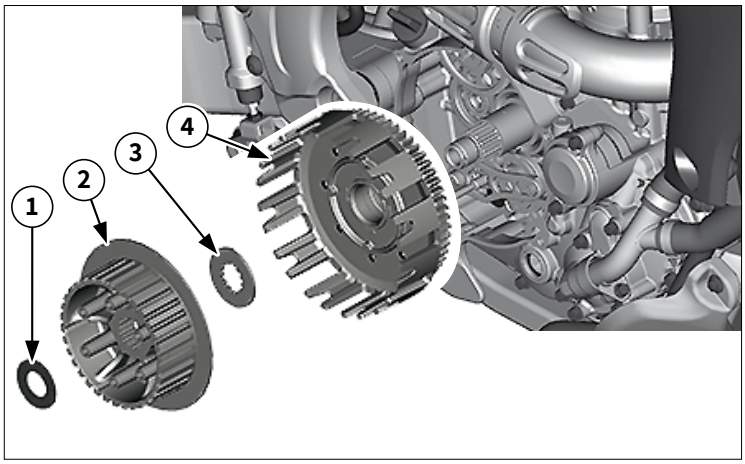

- Remove the lock washer “1”, the hub “2”, the spacer “3” and the clutch housing “4”.

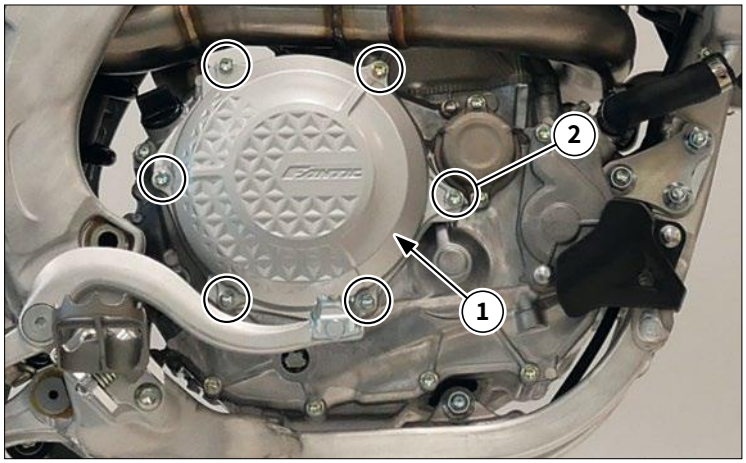

Clutch Removal (XXF450 version)

– Remove bolts “2” from the clutch crankcase “1” following a crossed pattern, then remove the crankcase;

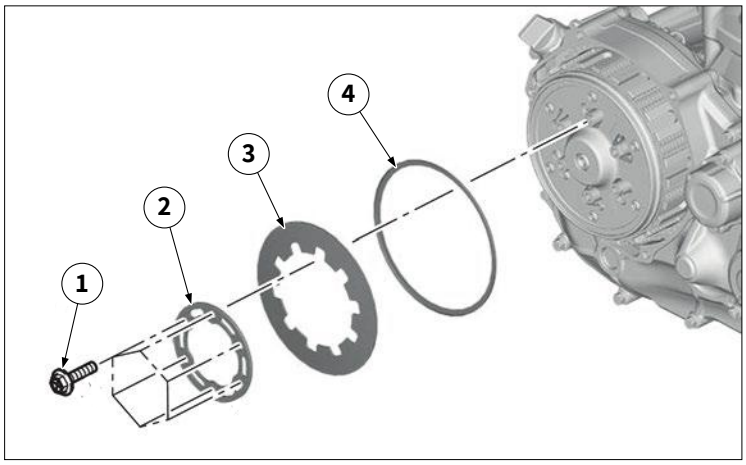

– Remove bolts “1”, first pressure plate “2”, clutch spring “3” and spring retainer “4”;

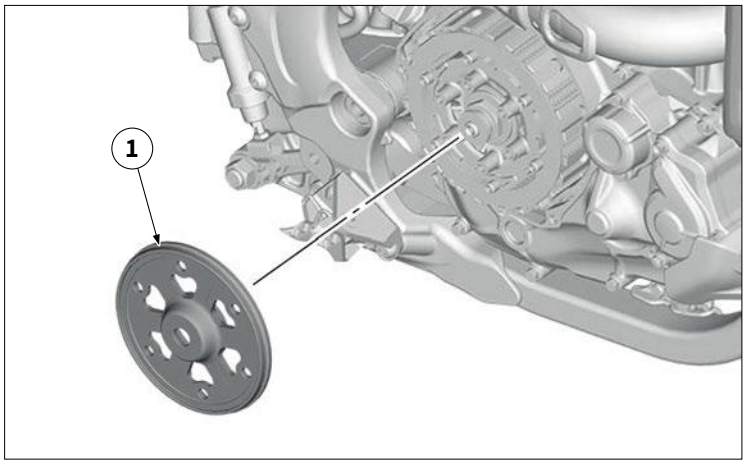

– Remove the second pressure plate “1”;

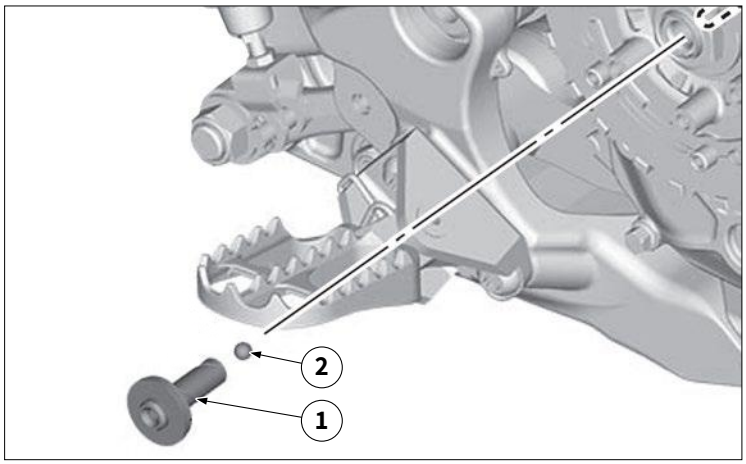

– Remove the thrust rod “1” and ball “2”;

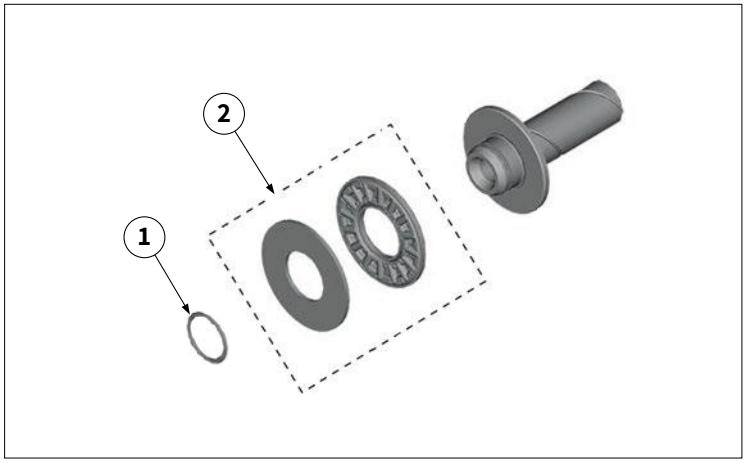

– Remove the retaining ring “1” and bearing “2”;

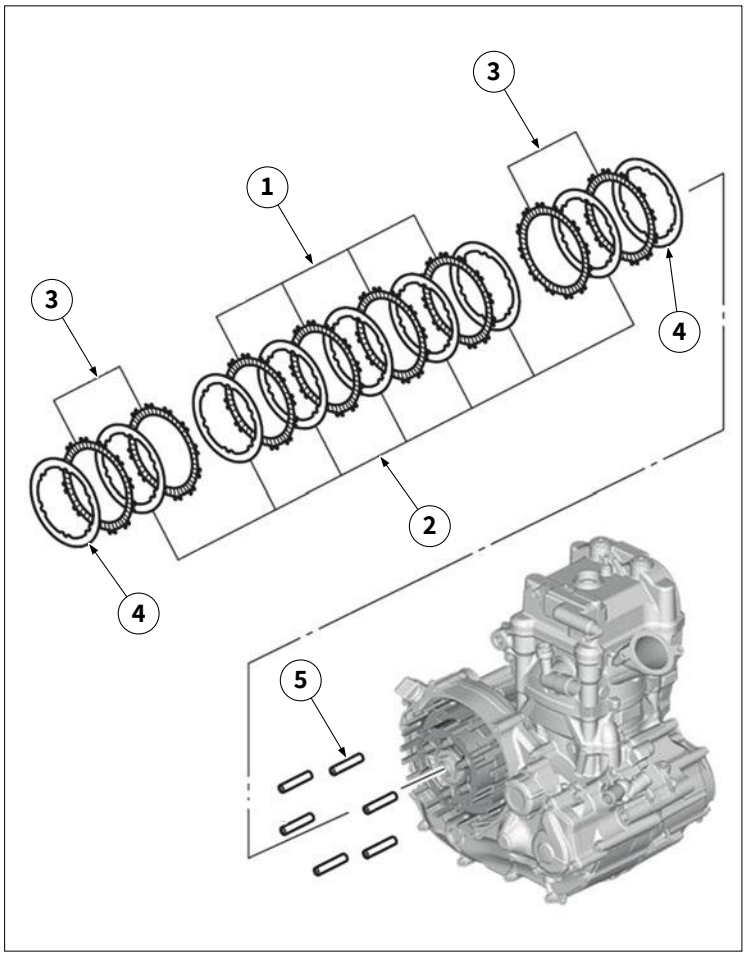

– Remove the friction plates (unpainted) “1”, clutch plates “2”, friction plates (painted) “3”, clutch plates “4” and collars “5”;

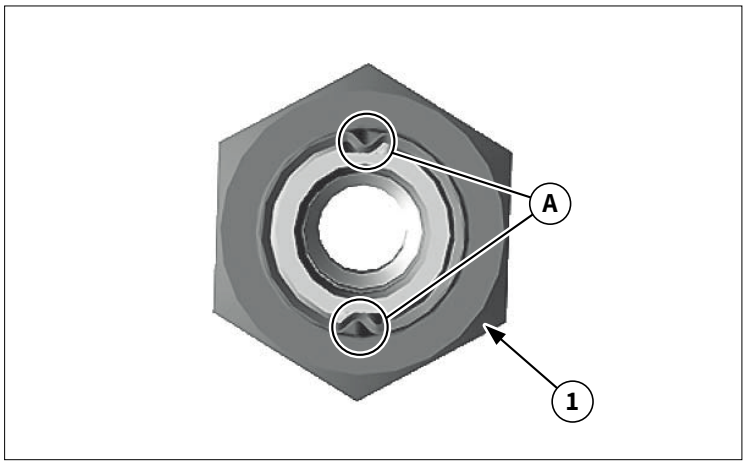

– Straighten the ribs “A” of the clutch hub nut “1”;

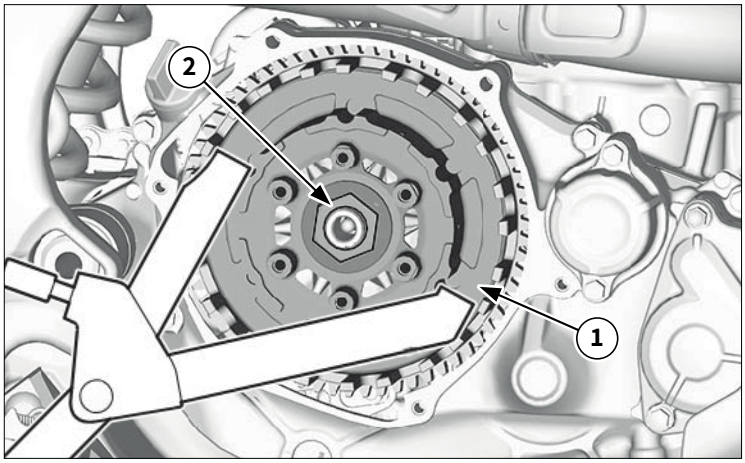

– While holding the sleeve “1” using the universal locking tool, loosen the clutch hub nut “2”;

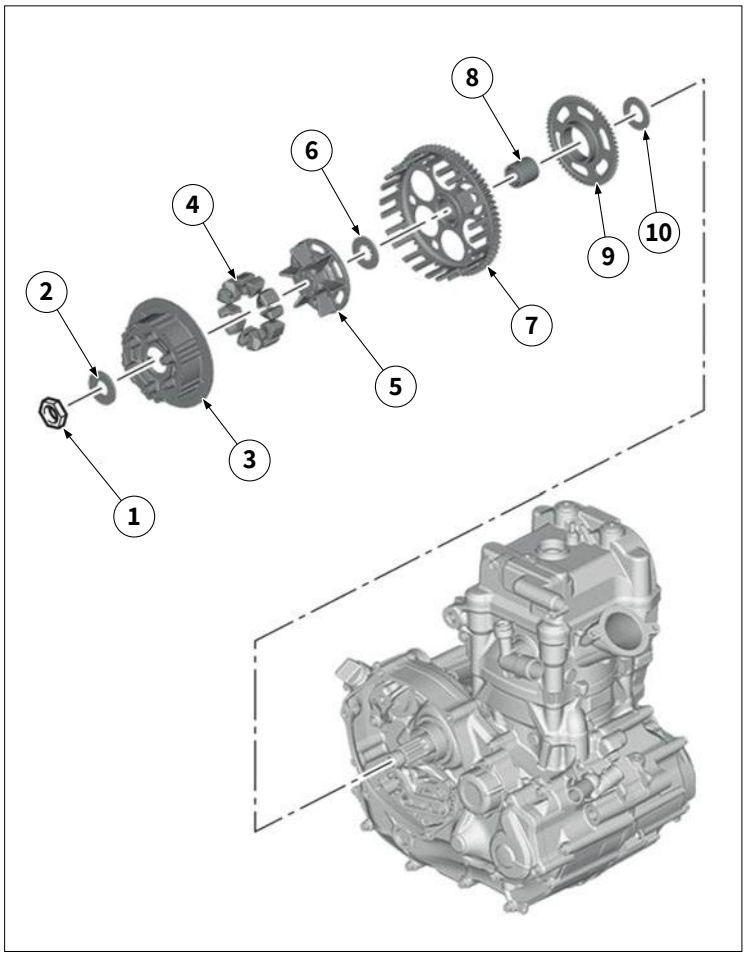

– Remove clutch hub nut “1”, washer “2”, sleeve “3”, shock absorber “4”, clutch hub “5”, washer “6”, primary transmission driven gear “7”, collar “8”, idle gear “9” and washer “1”;

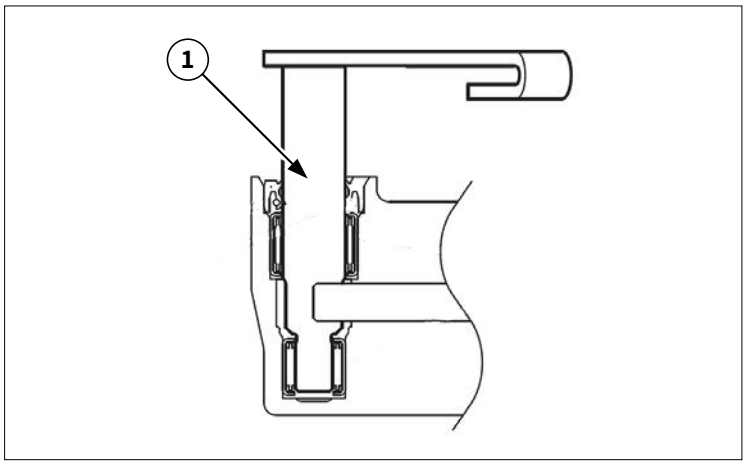

– Remove the release lever shaft “1”;

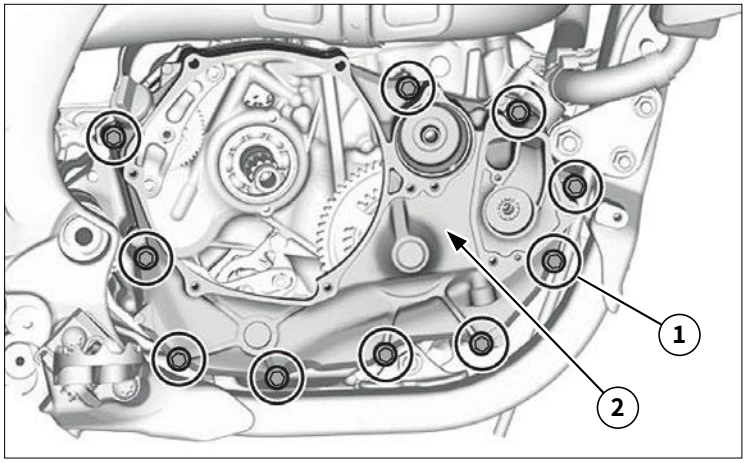

– Remove the bolts “1” and the crankcase cover (right) “2”;

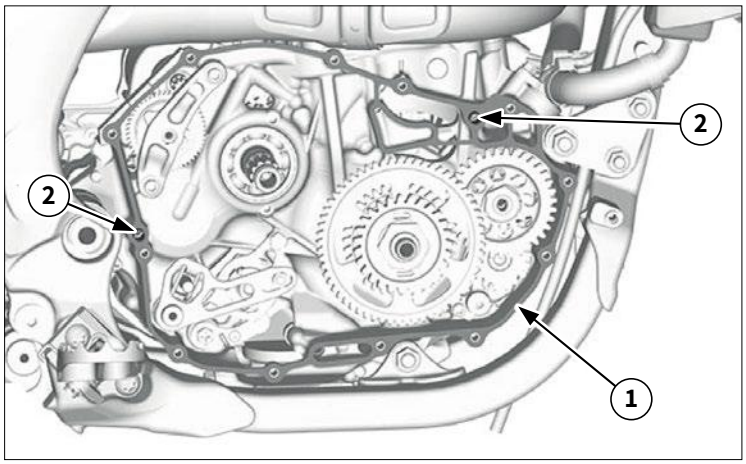

– Remove the gasket “1” and finally the two centring pins “2”.

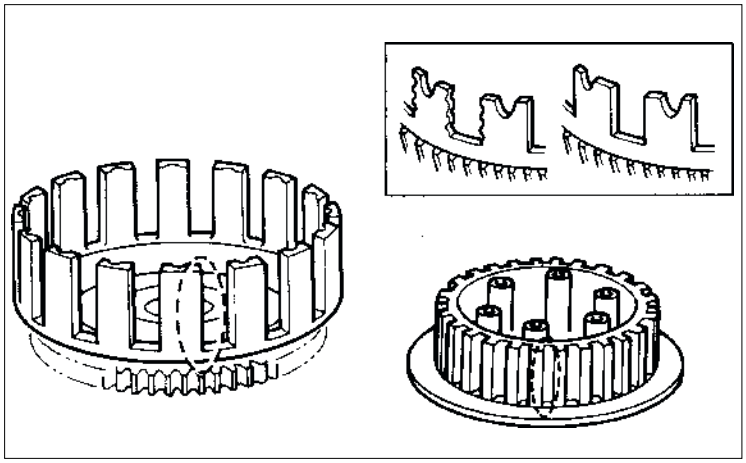

Check the clutch elements

– Check the clutch housing and clutch hub for wear/cracks/ damage, replace them;

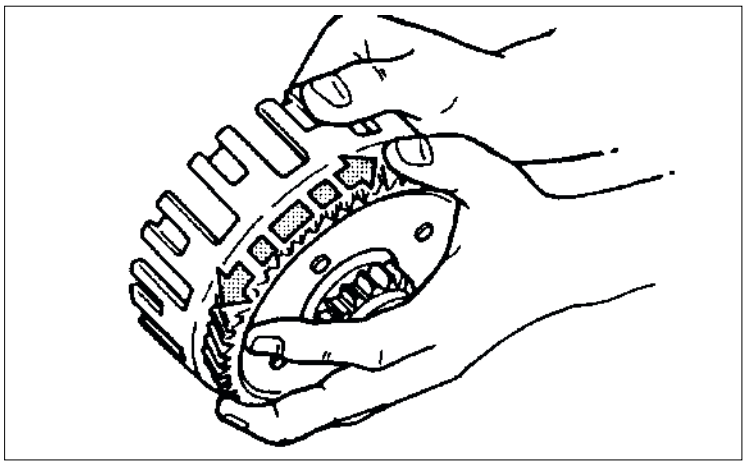

– Check the driven gear of the primary transmission for circumferential clearance and/or damage to the teeth. If it has one or both defects, replace it;

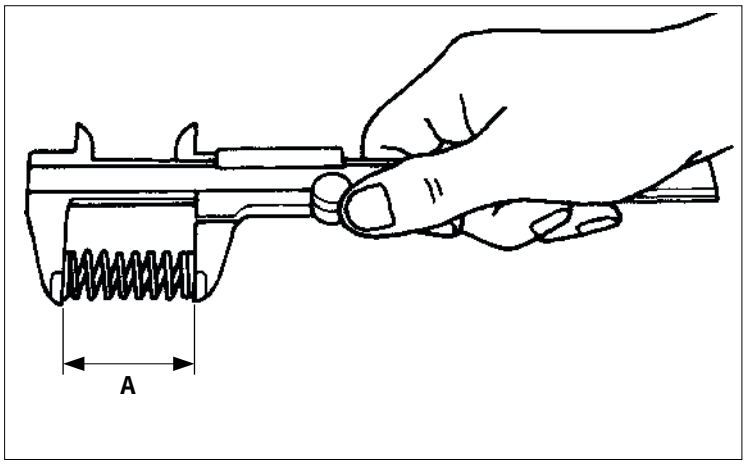

(XXF 250 / XEF 250 / XEF 450 versions)

– Measure the free length "A" of the clutch springs. If not in accordance with specifications, replace the springs all together;

Clutch spring free length (XXF 250 / XEF 250):
44.00 mm (1.73 in)
Minimum limit: 41.80 mm (1.65 in)

Clutch spring free length (XEF 450):
48.00 mm (1.89 in)
Minimum limit: 45.60 mm (1.80 in)

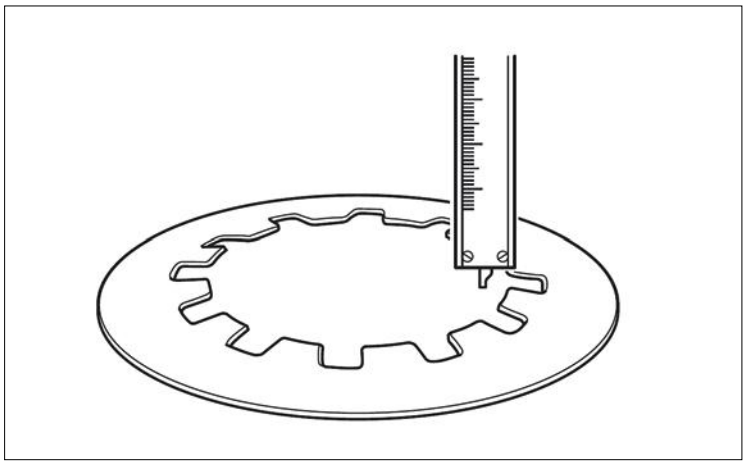

(XXF 450 version)

– Measure the free height of the clutch springs. If not in accordance with specifications, replace the springs all together;

Free spring height: 5.80 mm (0.228 in)
Free height limit: 5.51 mm (0.217 in)

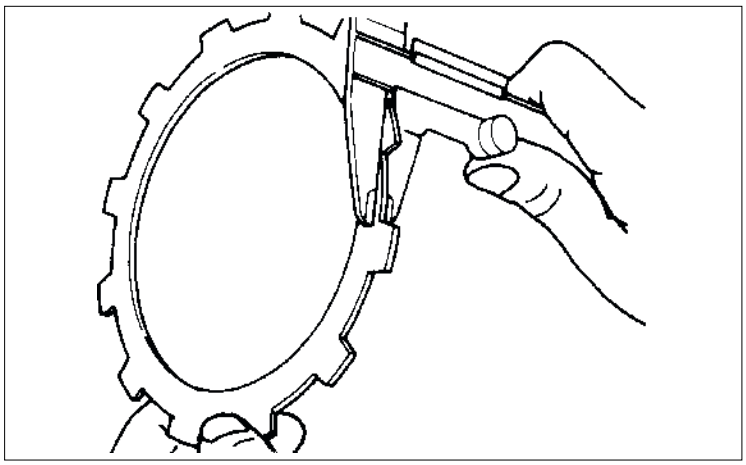

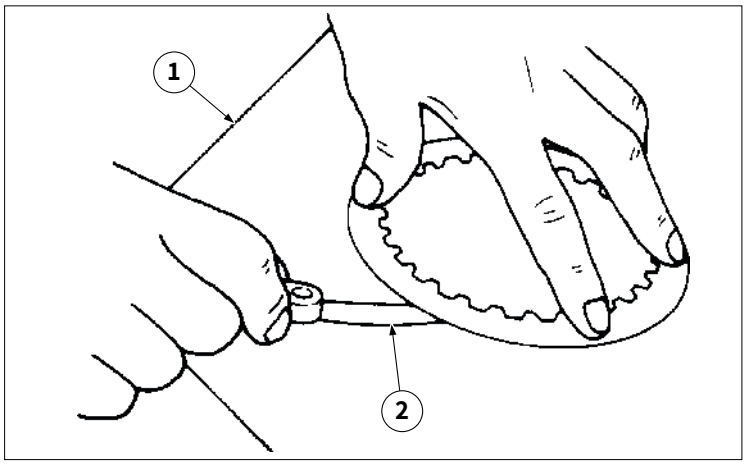

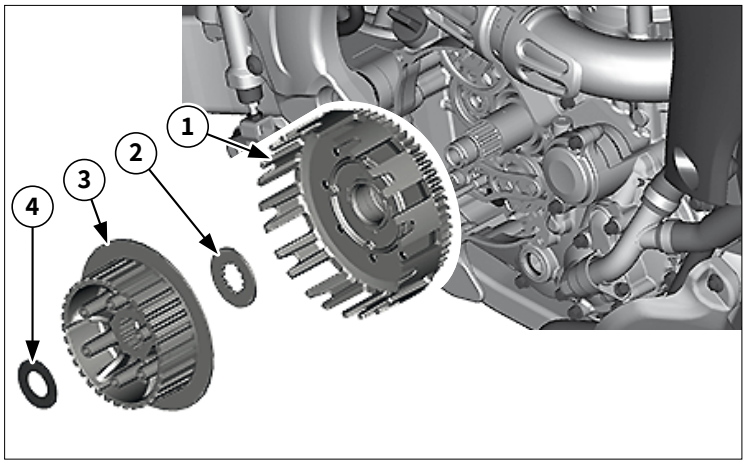

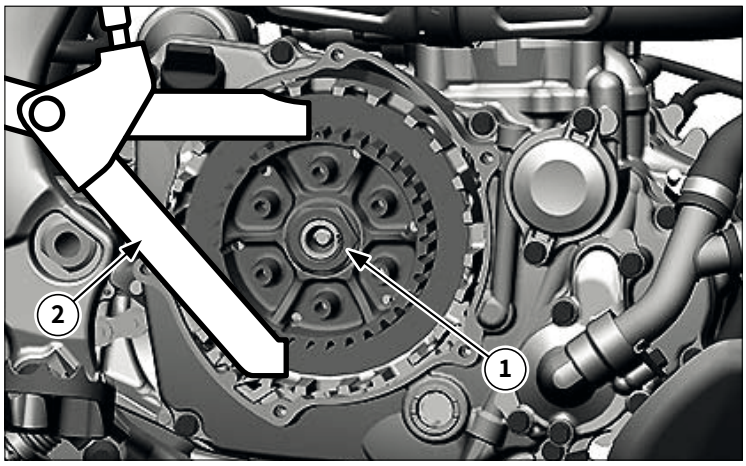

– Measure the thickness of friction discs 1 and 2. If not in accordance with specifications, replace the disc;

Friction disc thickness (XXF 250):
2.70–2.90mm (0.106–0.114 in)
Minimum limit: 2.60 mm (0.102 in)

Friction disc 1 thickness (XEF 250):
2.70–2.90mm (0.106–0.114 in)
Minimum limit: 2.60 mm (0.102 in)

Friction disc 2 thickness (XEF 250):
2.72–2.88mm (0.107–0.113 in)
Minimum limit: 2.62 mm (0.103 in)

Friction discs thickness (XEF 450):
2.92–3.08mm (0.115–0.121 in)
Minimum limit: 2.82 mm (0.111 in)

Friction discs thickness (XXF 450):
2.12–2.28mm (0.083–0.090 in)
Minimum limit: 2.02 mm (0.080 in)

– Measure the distortion and thickness of the clutch disc, using a reference plane “1” and a thickness gauge “2”;
– If not in accordance with specifications, replace the disc.

Distortion limit (XXF 250 / XEF 250): 0.20 mm (0.008 in)

Clutch disc thickness (XXF 250 / XEF 250):
1.50–1.70mm (0.059–0.067 in)

Distortion limit (XXF 450 / XEF 450):
0.10 mm (0.004 in)

Clutch installation (XXF 250 / XEF 250 / XEF 450 versions)

– Install the clutch housing “1”, spacer “2”, hub “3” and lock washer “4”;

Install washer “4” with the “OUT” reference facing outwards. (XXF 250 / XEF 250)

Install washer “4” by aligning its retainers with the ribs of the clutch hub. (XXF 450 / XEF 450)

– Install nut “1”, lock the clutch hub with universal locking tool “2” and tighten the nut to the specified torque;

Nut (clutch boss) (XXF 250 / XEF 250):
95 Nm (9.5 m•kg, 70 ft•lb)

Nut (clutch boss) (XEF 450):
75 Nm (7.5 m•kg, 55 ft•lb)

Apply engine oil to the thread and contact surfaces of the clutch hub nut.

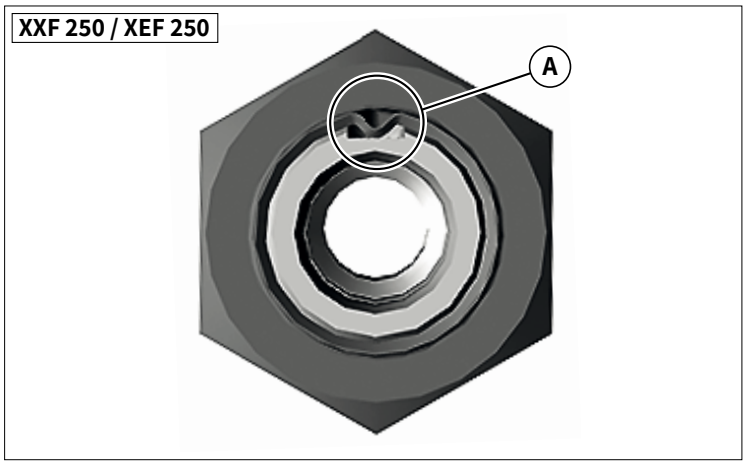

Lock the clutch hub nut at notch "A" of the primary shaft. (XXF 250 / XEF 250 versions)

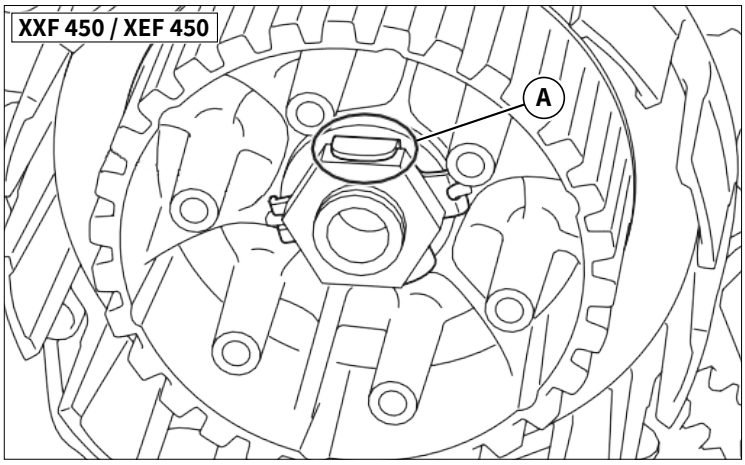

Fold in tab "A" of the lock washer. (XXF 450 / XEF 450 versions)

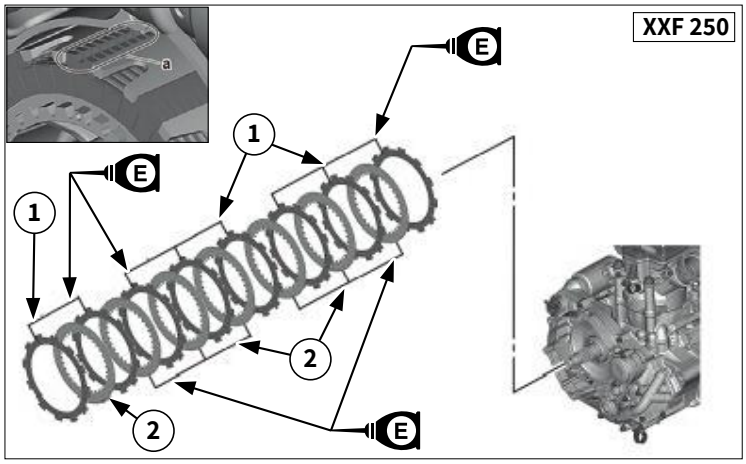

(XXF 250 version ONLY)

- Install friction discs "1" and clutch discs "2" alternately on the clutch hub, starting and ending with a friction disc.

Install the friction plates in the clutch hub, aligning the grooves "a" on each friction plate with each other.

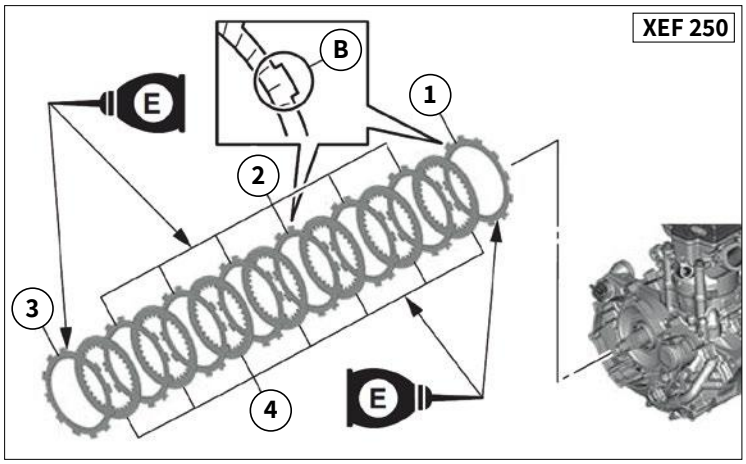

(XEF 250 version ONLY)

- Install friction discs and clutch discs "4" alternately on the clutch hub, starting and ending with a friction disc.
- Install friction discs in this order:

1. friction disc 1 (identification colour "B": black) x1;
2. friction disc 2 (identification colour "B": orange) x6;
3. friction disc 1 (identification colour "B": black) x1.

Apply engine oil to the friction and clutch discs.

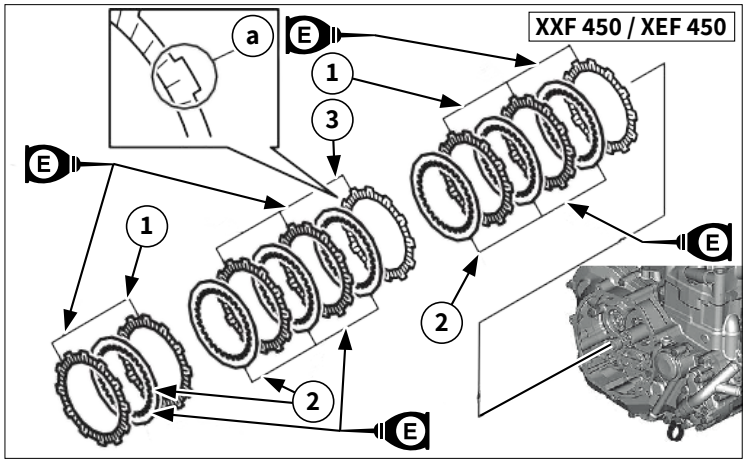

(XEF 450 version)

- Install friction discs and clutch discs “2” alternately on the clutch hub, starting and ending with a friction disc.
- Install friction discs in this order:

1. friction disk “1” x3;
2. friction disk “3” (identification colour “a”: violet) x3;
3. friction disk “1” x2.

Apply engine oil to the friction and clutch discs.

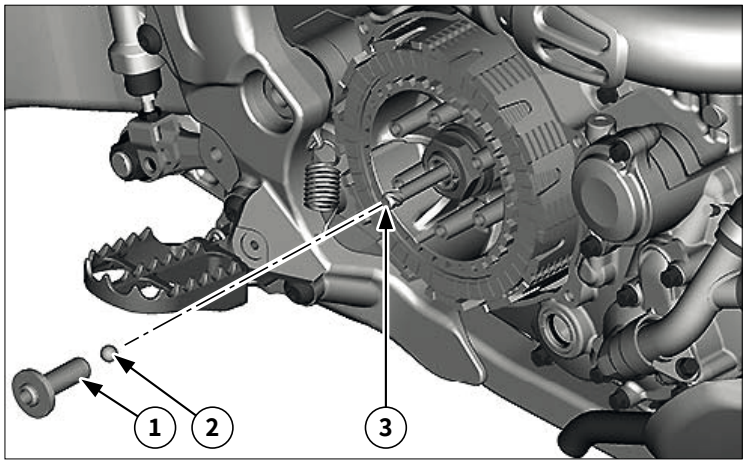

- Install thrust rod “1”, the ball “2” and thrust bearing “3”;

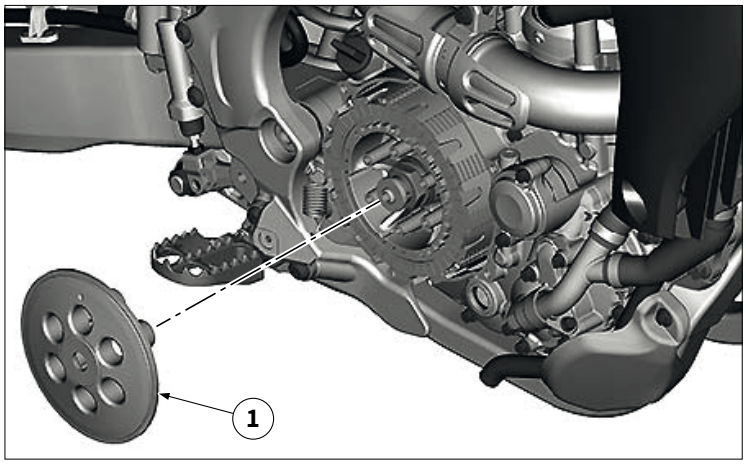

- Install the thrust plate “1”;

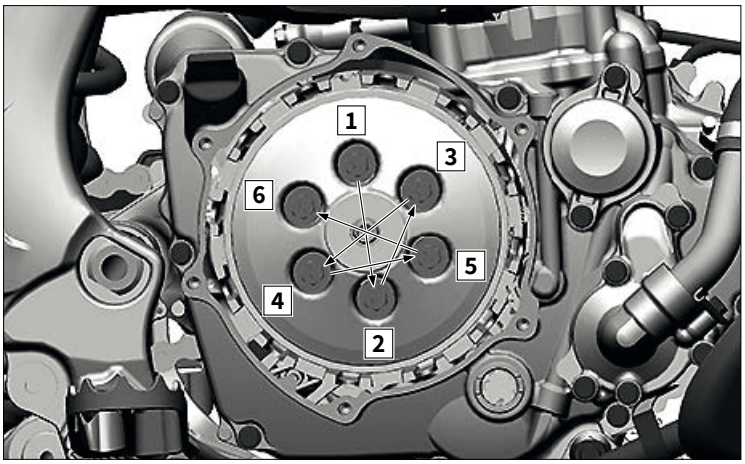

- Install the springs and bolts of the clutch and tighten them following a cross pattern;

Bolt (clutch spring):
10 Nm (1.0 m•kg, 7.2 ft•lb)

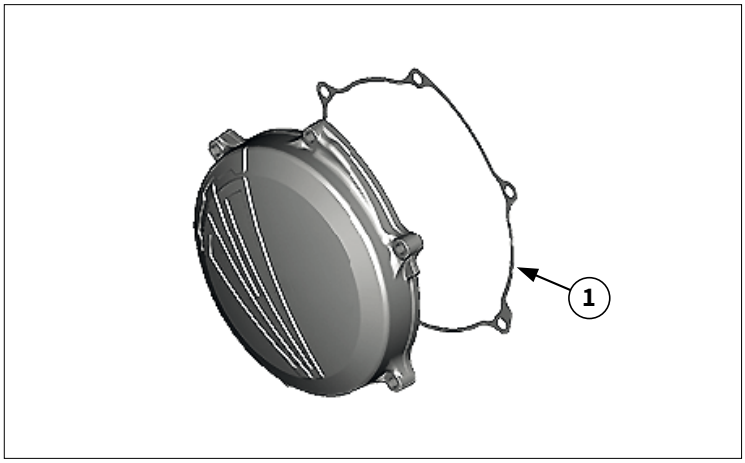

– Install a new gasket “1” (XXF 250 / XEF 250);
– Install a new O-ring “1” (XXF 450 / XEF 450);

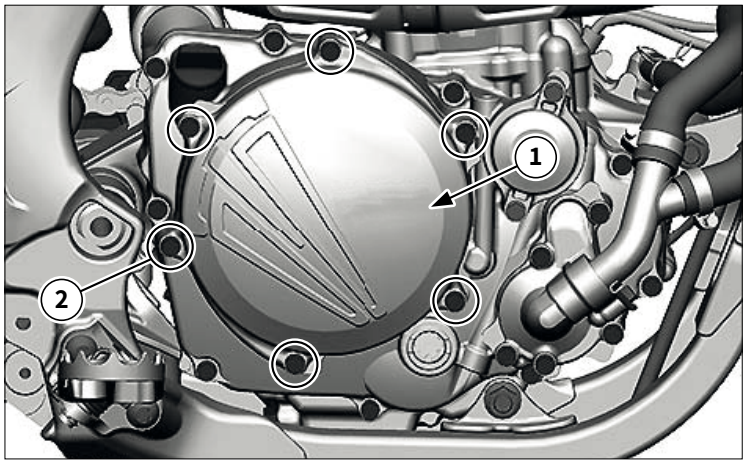

– Install the clutch crankcase “1” and bolts “2”. Tighten them following a cross pattern.

Bolt (clutch cover):
10 Nm (1.0 m•kg, 7.2 ft•lb)

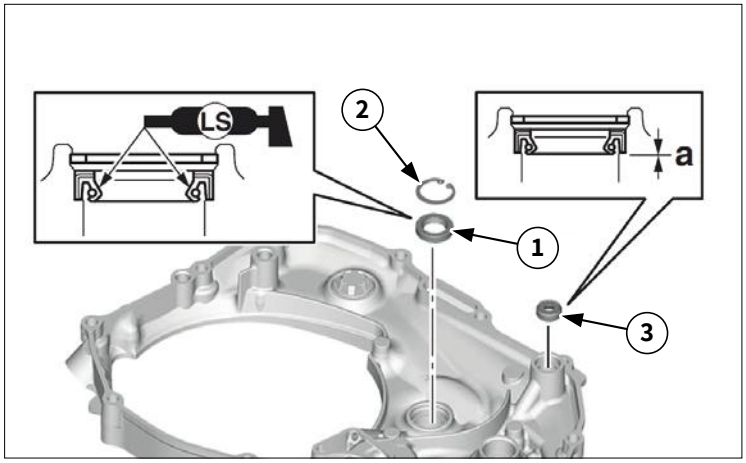

Clutch installation (XXF 450 version)

– Install a new oil seal "1" (in parallel, with the manufacturer"s references facing inwards), a new retaining ring "2" and the seat control ball "3";

ⓘ **Apply lithium soap grease to the oil seal lip.**

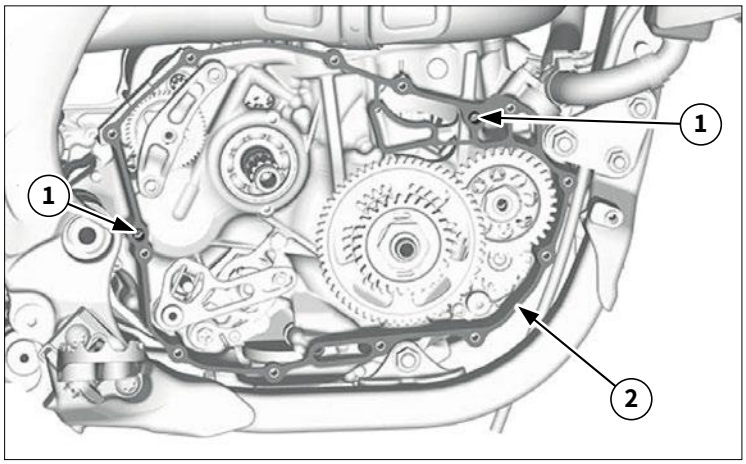

– Install the two centring pins "1" and a new gasket "2";

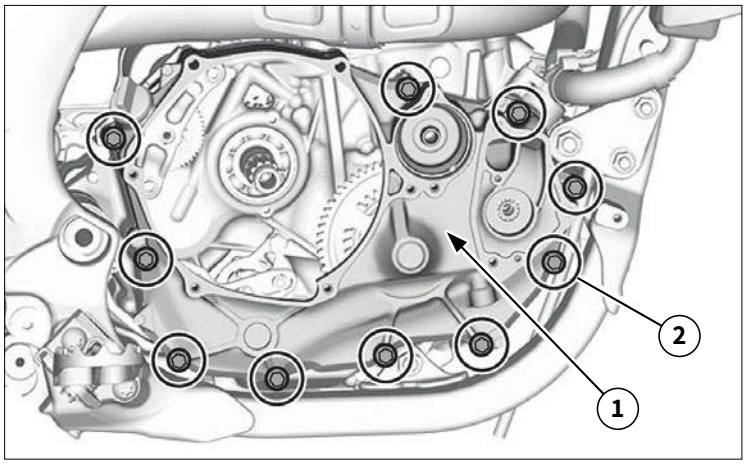

– Install the right crankcase cover "1" and bolts "2" and tighten them in a crossed pattern;

Spring bolts: 10 Nm (1.0 m•kg, 7.4 ft•lb)

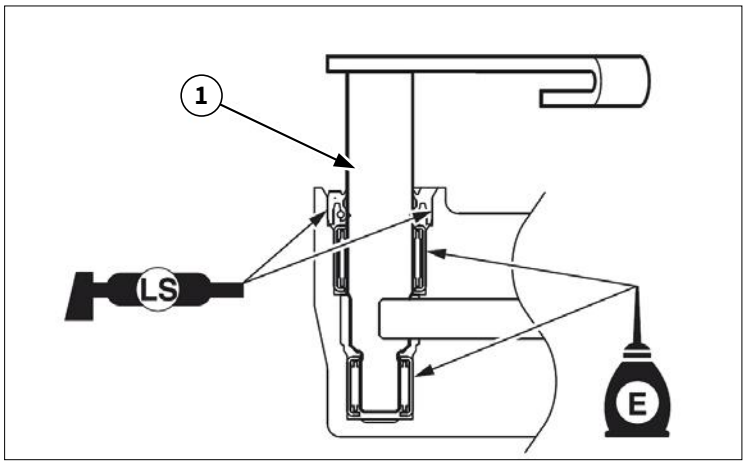

– Install the release lever shaft "1"

ⓘ **Apply lithium soap grease to the oil seal lip.**

ⓘ **Apply and/or lubricate using Engine Oil to the bearings (top and bottom).**

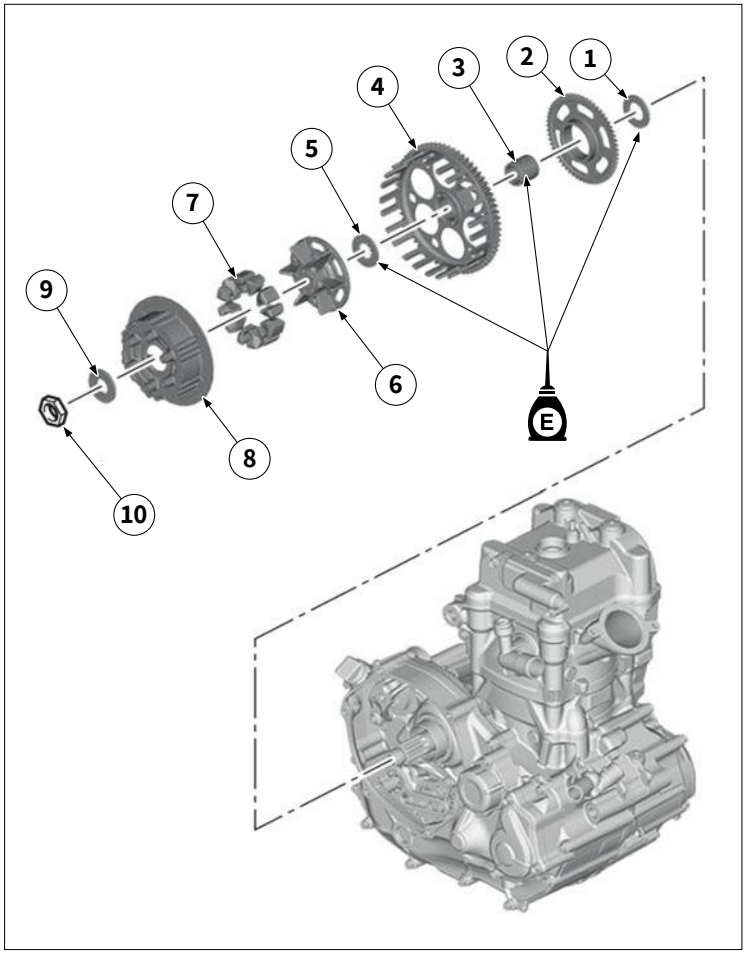

– Install washer “1”, idle gear “2”, collar “3”, primary transmission driven gear “4”, washer “5”, clutch hub “6”, shock absorber “7”, sleeve “8”, washer “9” and a new clutch hub nut “10”;

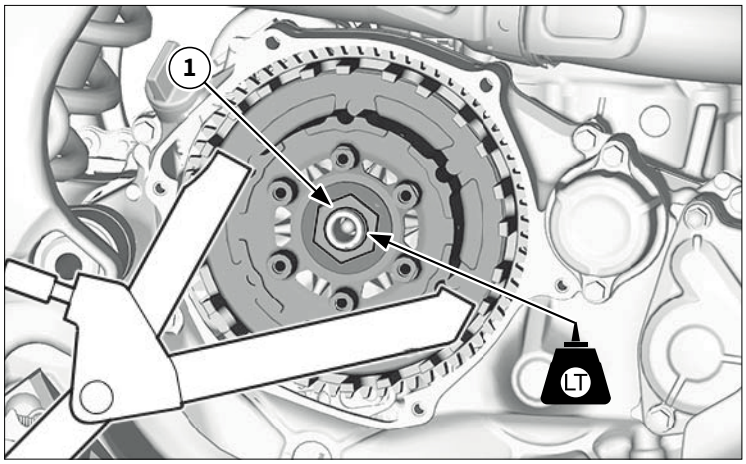

– While holding the sleeve with the universal locking tool, tighten the clutch hub nut “1”;

Nut (clutch boss):
105 Nm (10.5 m•kg, 77 ft•lb)

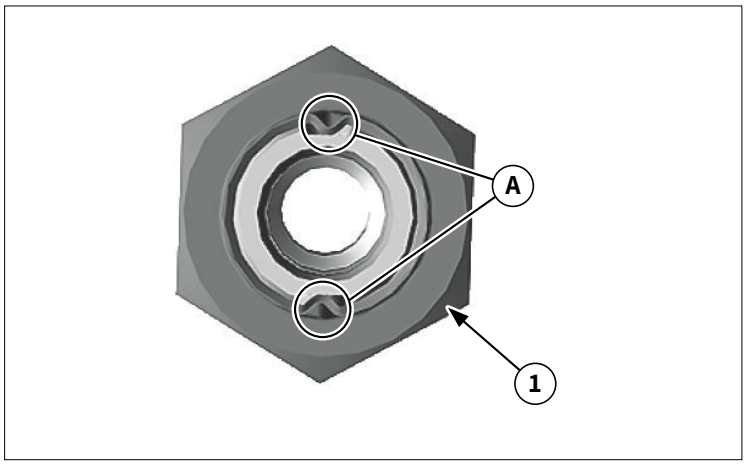

Lock the clutch hub nut at notch “A” of the primary shaft.

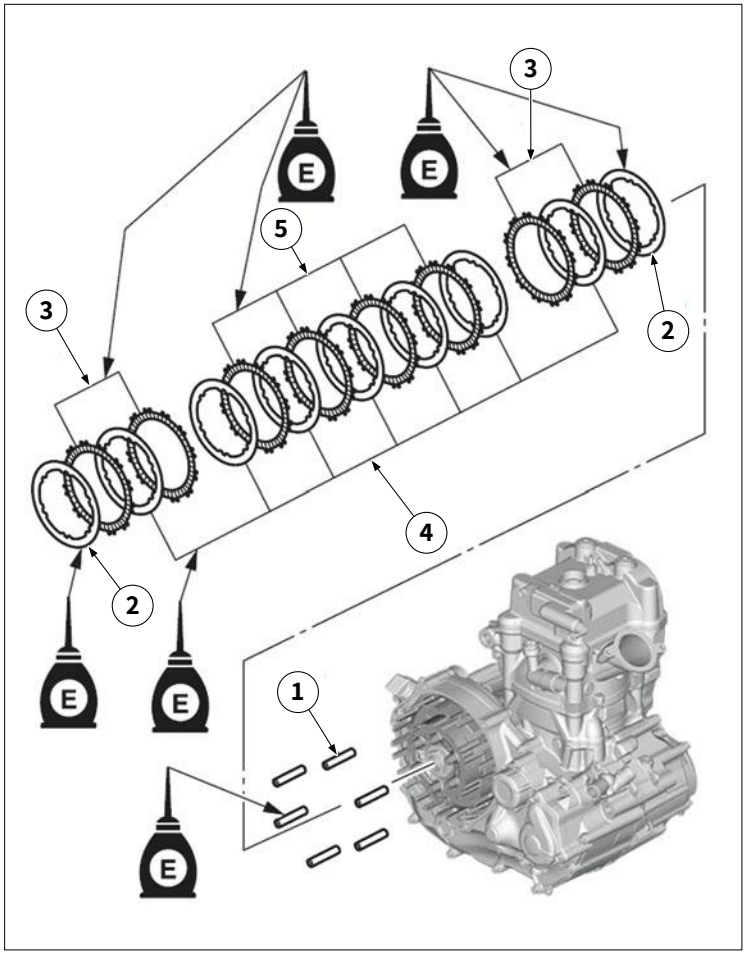

– Install collars “1”, clutch plates “2” (thickness : 1.0 mm (0.04 in)), friction plates (painted) “3”, clutch plates “4” (thickness: 1.4 mm (0.06 in)), friction plates (unpainted) “5”;

ⓘ **Friction plate “3” with blue paint on the outer circumference of the pawls.**

ⓘ **Install clutch plates and friction plates alternately on the sleeve, starting with a clutch plate and ending with a friction plate.**

ⓘ **From the clutch hub side, install the friction plates and clutch plates in the order shown in the illustrations.**

ⓘ **Apply engine oil to the collars, friction plates and clutch plates.**

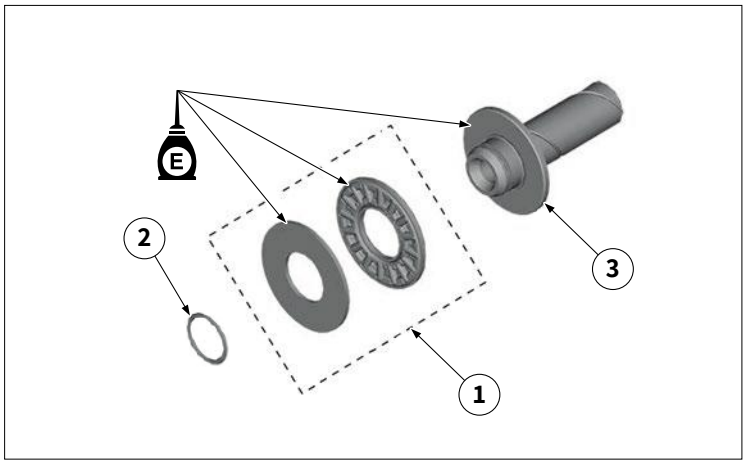

– Install bearing “1” and a new retaining ring “2” on thrust rod “3”;

ⓘ **Apply and/or lubricate using engine oil to the bearing and thrust rod.**

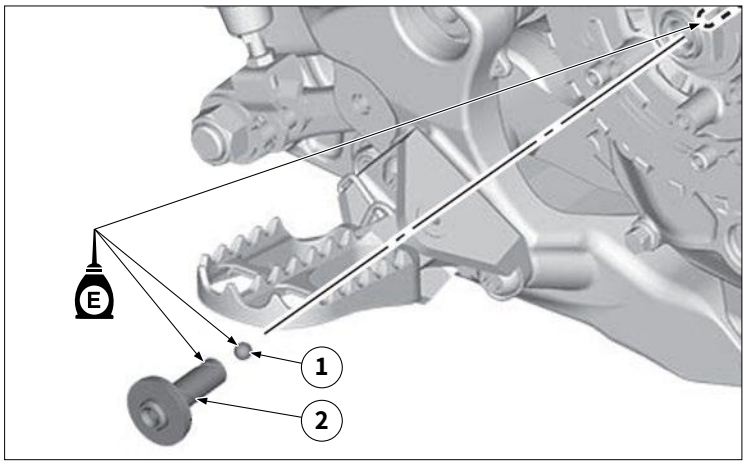

– Install ball “1” and thrust rod “2”;

ⓘ **Apply and/or lubricate using engine oil to the thrust rod and ball.**

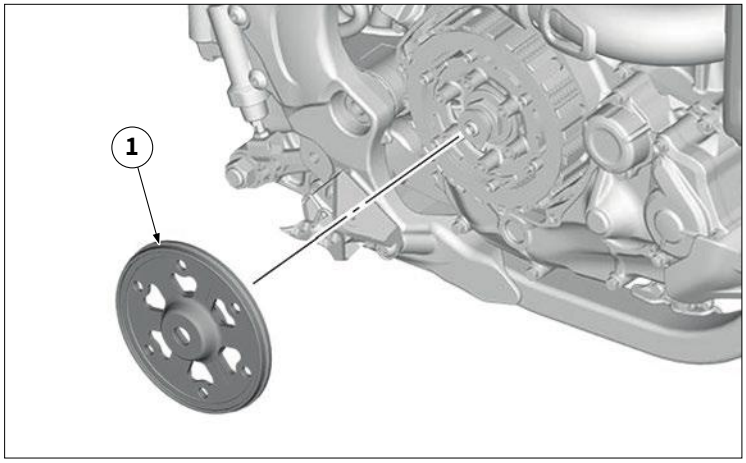

– Install the pressure plate “1”;

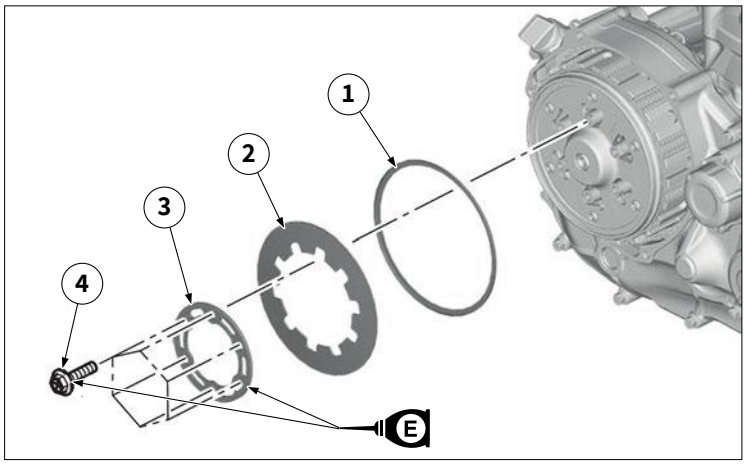

– Install the spring retainer “1”, clutch spring “2”, pressure plate “3”, with their bolts “4” and tighten them;

Pressure plate bolts: 10 Nm (1.0 m•kg, 7.4 ft•lb)

Apply engine oil to the bolt threads and contact surface and on the contact surface of the pressure plate.

First temporarily tighten all bolts to 4.0 N-m (0.40 kgf-m, 3.0 lb-ft) following a crossed pattern. Then retighten them to 10 N-m (1.0 kgf-m, 7.4 lb-ft) following a crossed pattern.

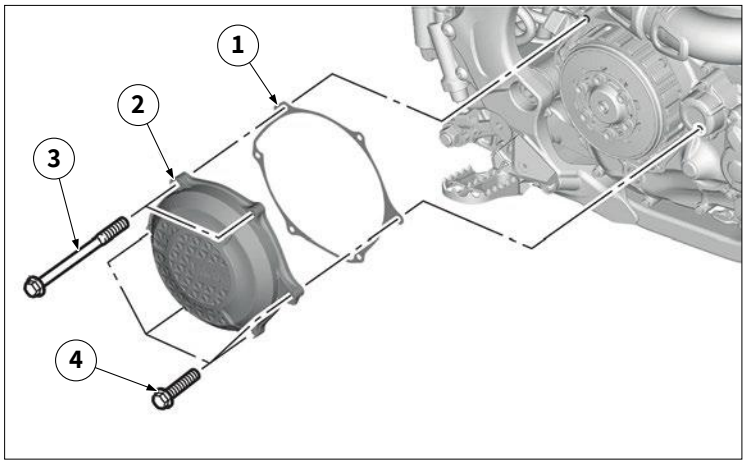

– Install new gasket “1”, clutch housing “2”, long bolts “3” and short bolts “4” and tighten;

Clutch crankcase bolts: 10 Nm (1.0 m•kg, 7.4 ft•lb)

Tighten bolts in steps and using a criss-cross pattern.

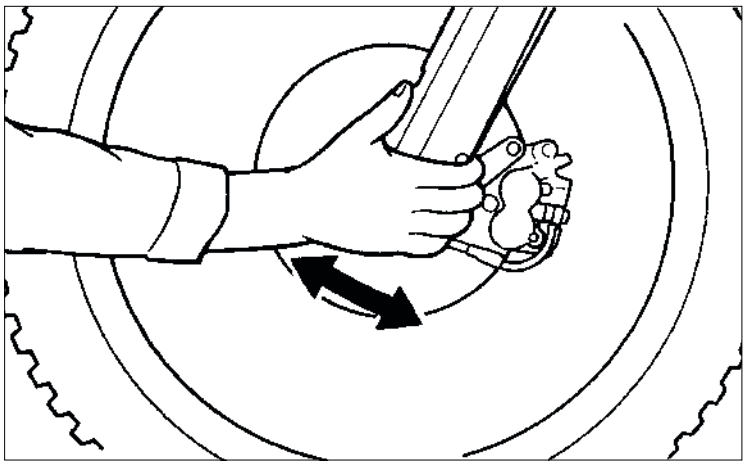

4.10 STEERING PLAY CONTROL AND ADJUSTMENT

Steering play control

– Place a stand under the engine to raise the front wheel off the ground;

⚠ **Securely support the vehicle so that there is no danger of it falling over.**

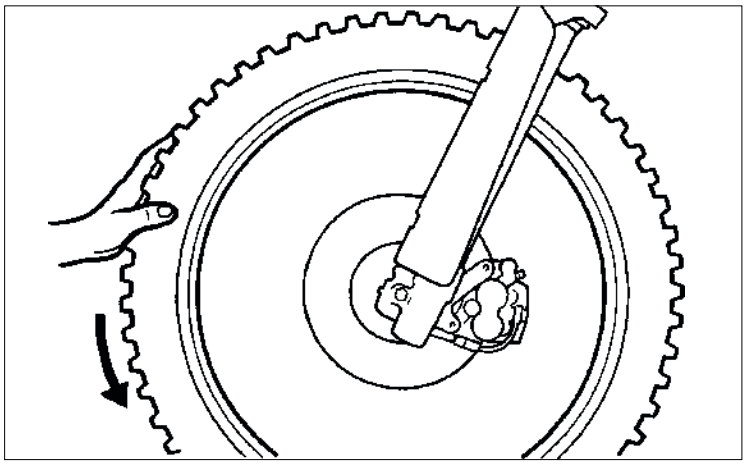

– Grasp the bottom of the forks and gently rock the fork assembly back and forth. If free play is present adjust the steering head;
– Check that the steering is working evenly by turning it fully to the right and left. If play is present, adjust the steering head.

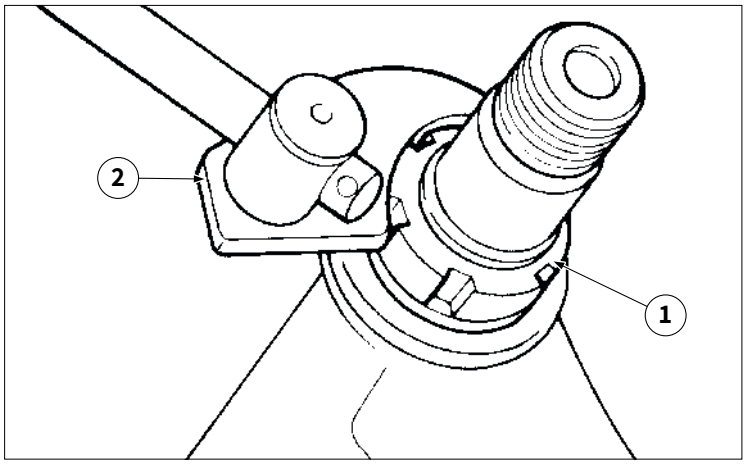

Steering play adjustment

– Remove the front number plate, handlebars, upper fork plate and the washer on the steering sleeve;
– Loosen the lock nut “1” on the steering ring nut using a ring nut spanner “2”;

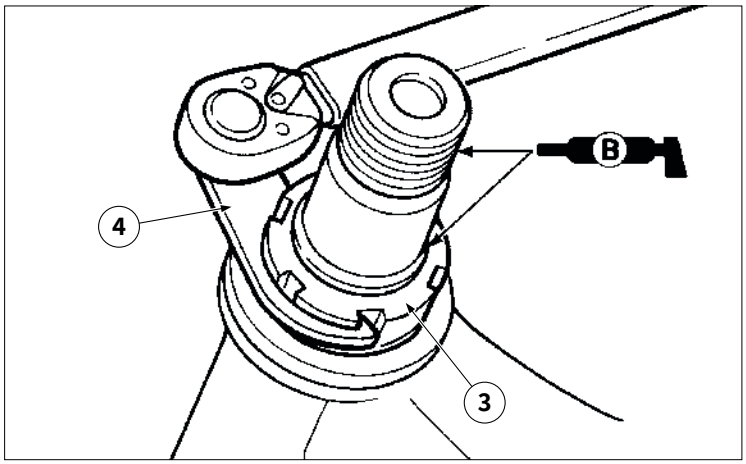

– Start tightening the steering ring nut “3”, with a ring nut spanner and a torque spanner “4”, to the specified torque;

Initial clamping of the handlebar ring nut:
38 Nm (3.8 m•kg, 27 ft•lb)

– Turn the steering wheel left and right a few times to check that it moves smoothly. If not, check the steering bearings and replace if necessary;
– Then loosen the handlebar ring nut “3” by one turn and tighten it to the specified torque.

Handlebar ring nut final tightening:
7 Nm (0.7 m•kg, 5.1 ft•lb)

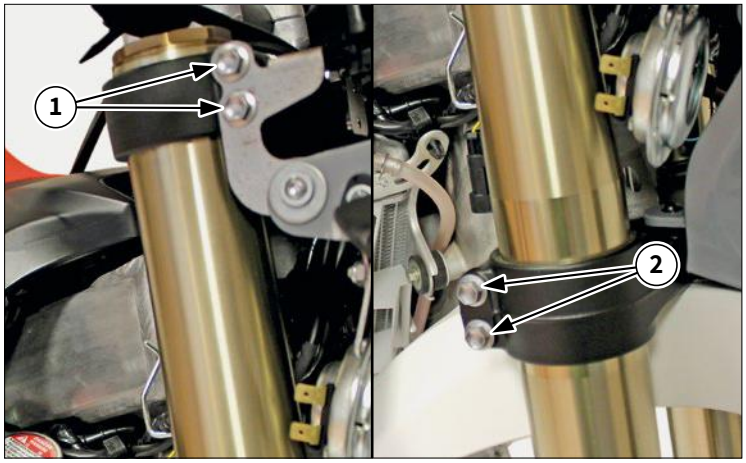

4.11 FORK

For the maintenance of hydraulic components, contact an authorised Fantic workshop.

– Regularly check the upper “1” and lower “2” fastening screws of both stems. If they are loose, tighten them to the specified torque.

Bolt “1”: 21 Nm (2.1 m•kg, 15 ft•lb)

Bolt “2”: 21 Nm (2.1 m•kg, 15 ft•lb)

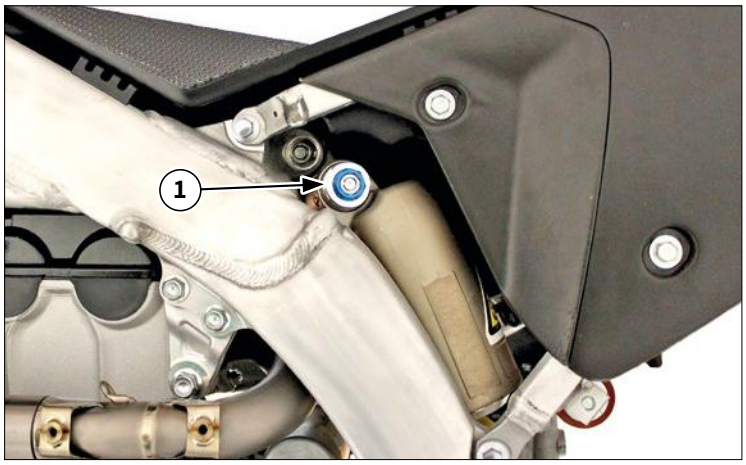

4.12 SHOCK ABSORBER

– Regularly check the upper fastening screw of the shock absorber “1”. If it is loose, tighten it to the specified torque.

Nut “1”: 56 Nm (5.6 m•kg, 41 ft•lb)

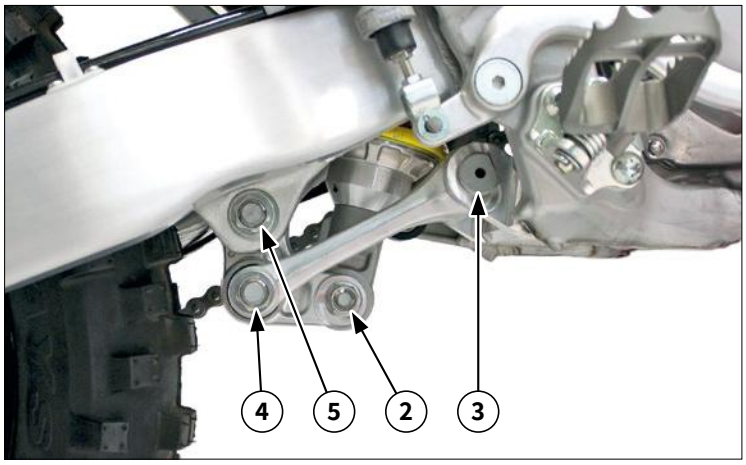

– Regularly check the shock absorber lower fastening screw “2” and linkage fastening screws “3”, “4” and “5”. If they are loose, tighten them to the specified torque.

Nut “2”: 53 Nm (5.3 m•kg, 41 ft•lb)

Nut “3” - “4”: 80 Nm (8.0 m•kg, 59 ft•lb)

Nut “5”: 70 Nm (7.0 m•kg, 52 ft•lb)

To ensure the best operation and durability of the rear shock absorber linkage, it is recommended to check, clean and grease the linkage bearings periodically.

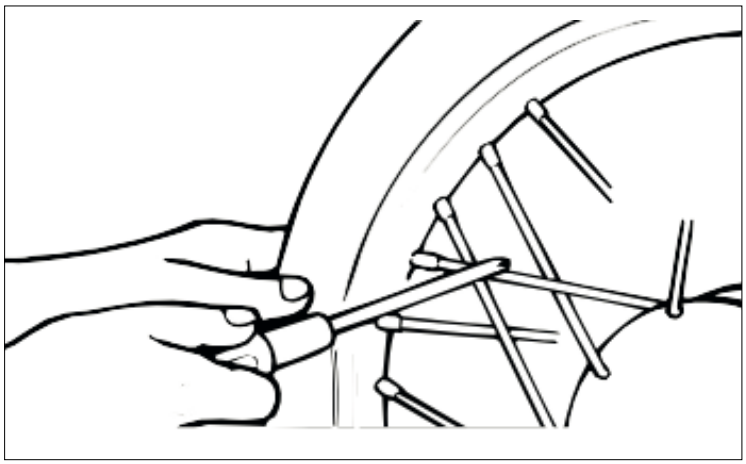

4.13 WHEELS

Spokes check and tightening

The following procedure applies to all spokes of both wheels.

– Check that the spokes are not broken or deformed, if they are, they must be replaced;
– Check the tension of the spokes by tapping on them with a screwdriver. A well tightened spoke will emit a light, tinkling tone, while a loose one will emit a deaf tone. In the case of a loose spoke, tighten it with a spoke wrench to the specified torque;

Spokes: 2.5 Nm (0.25 m•kg, 1.8 ft•lb)

Be sure to tighten the spokes before and after the running-in.

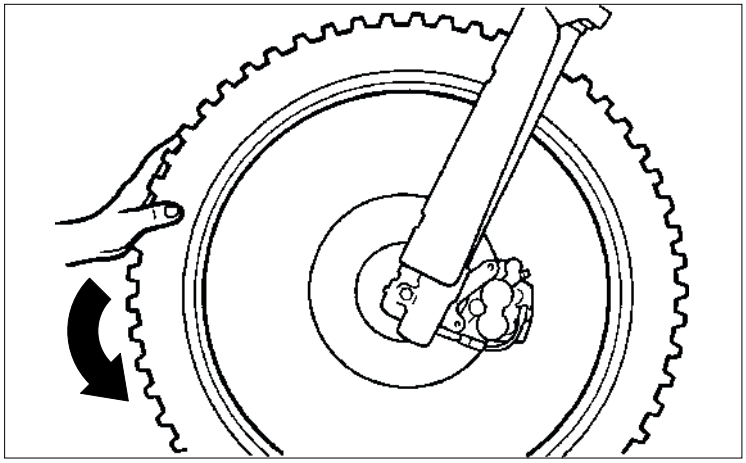

Wheel check

The following procedure applies to both wheels.

- Place a stand under the engine, lift the wheel and turn it. Check the centering and alignment of the rim channel with respect to the wheel hub. If there are any anomalies, proceed with the correction by pulling the spokes;

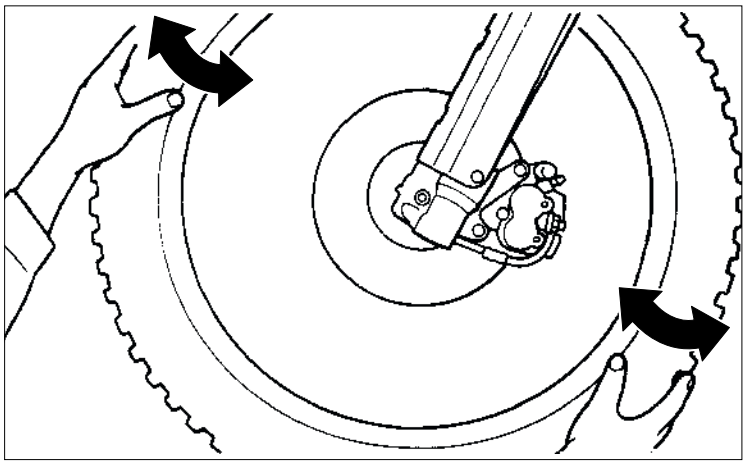

- Check that the wheel bearings do not have axial clearance. If there is, change the bearings.

If there are cracks or splits in the rim channels, it is necessary to replace them.

Never try to repair the wheel rims.

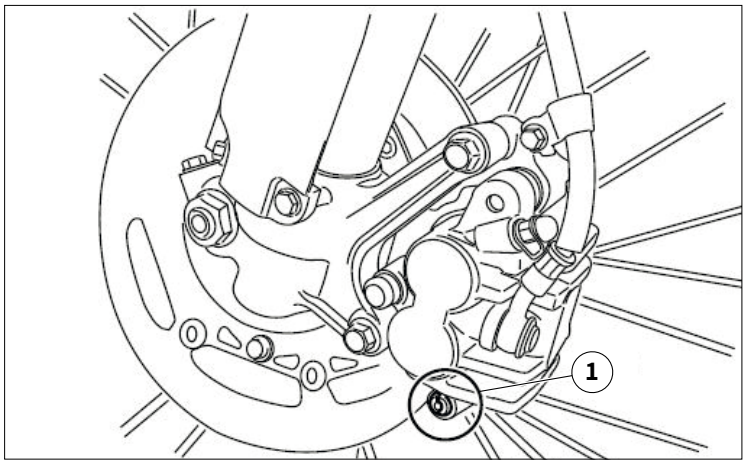

4.14 BRAKE PADS

Replace the front brake pads

- Remove the pad pin plug “1”;

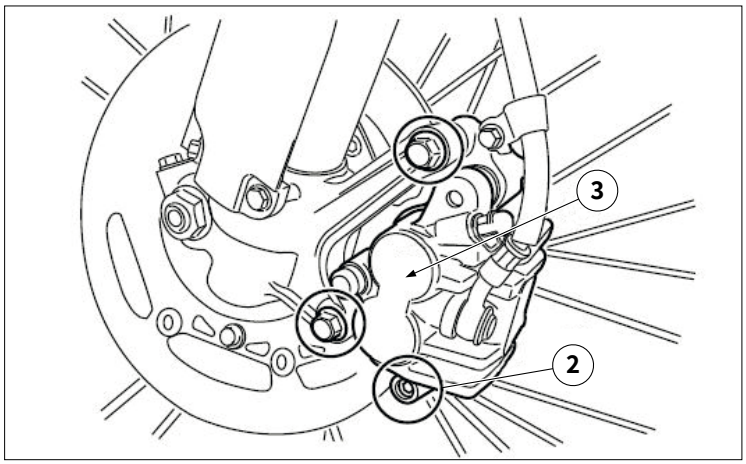

- Loosen the pad pin “2”;
- Unscrew the screws “3” securing the brake caliper;
- Remove brake caliper “4” from the fork;

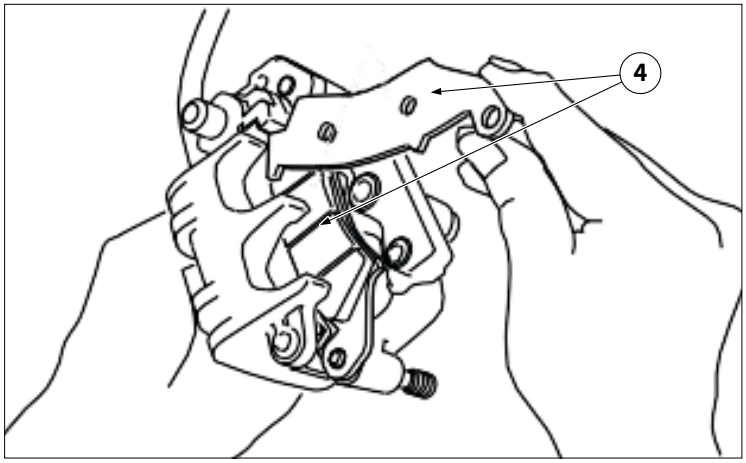

– Remove the pad pin and brake pads “4”;

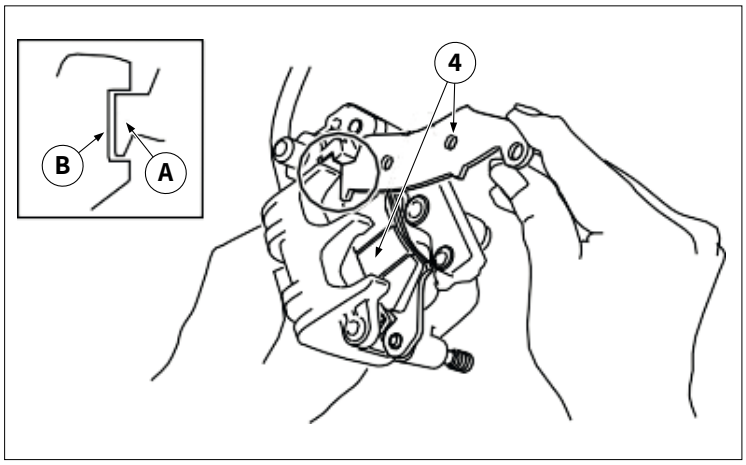

– Install the brake pads “4” with their protrusions “A” in the recesses of the brake calliper “B”. Temporarily tighten the pads pin “2”;

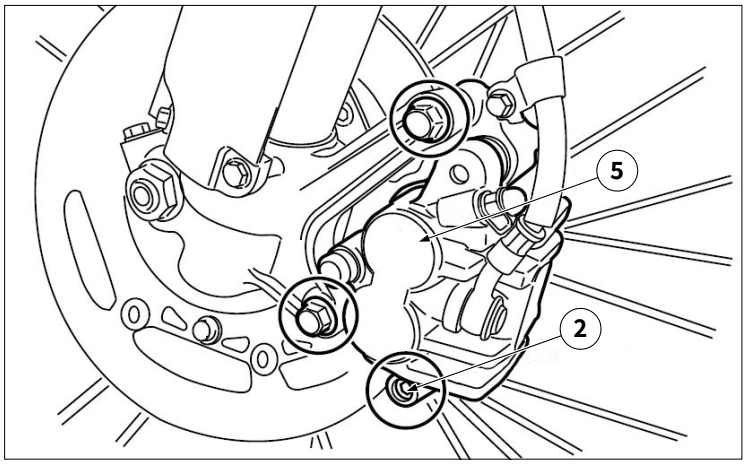

– Install the brake calliper “5” and tighten the relevant bolts to the specified torque. Tighten the pad pin “2” and insert the relative cap previously removed;

Bolt (brake caliper):
28 Nm (2.8 m•kg, 20 ft•lb)

Brake pad pin:
17 Nm (1.7 m•kg, 13 ft•lb)

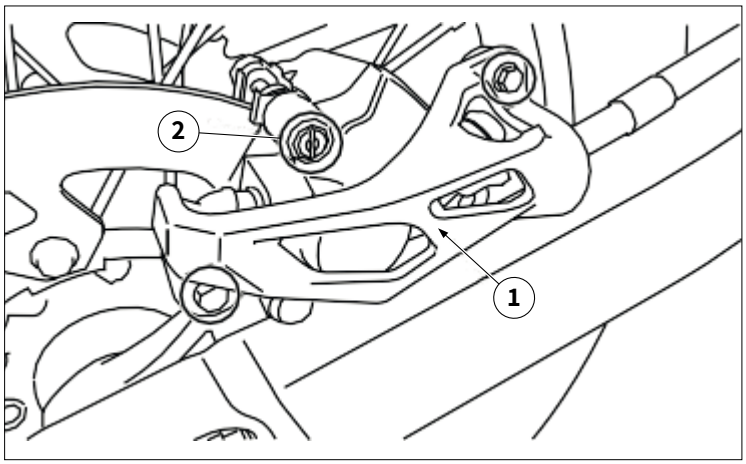

Replace the rear brake pads

– Remove the protection “1” and the pad pin plug “2”;

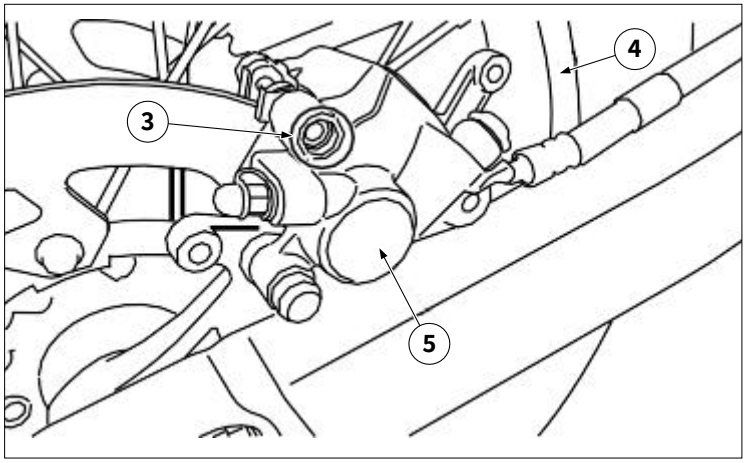

– Loosen the pad pin “3”, remove the rear wheel “4” and the brake calliper “5 “;

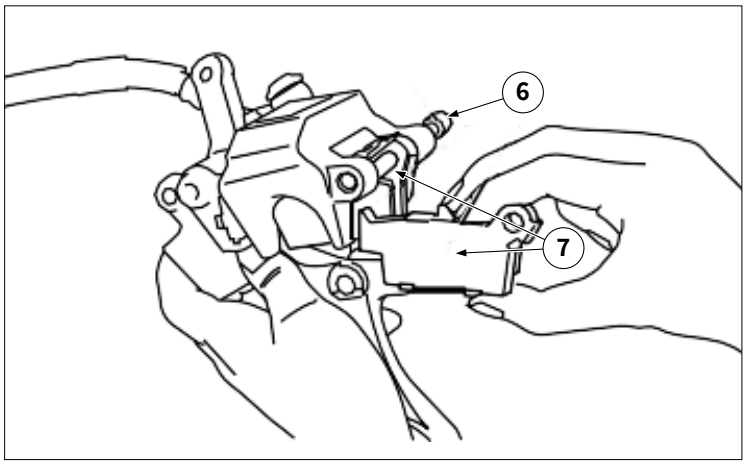

– Remove the pad pin “6” and brake pads “7”;

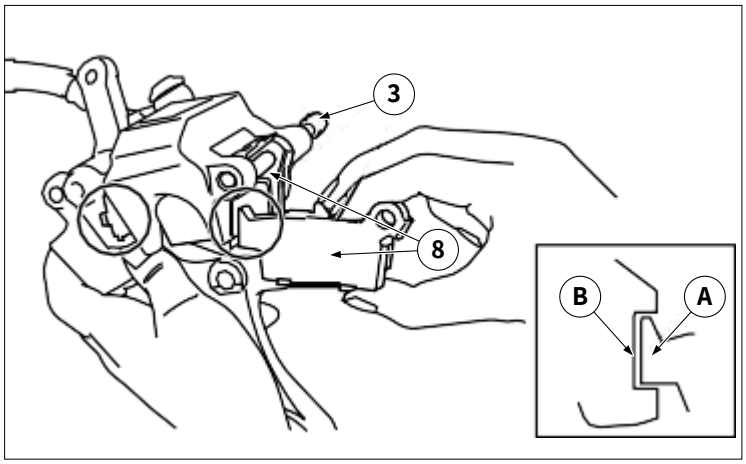

– Install the brake pads “8” with the relative protrusions “A” in the recesses “B” of the brake calliper. Temporarily tighten the pads pin “3”.

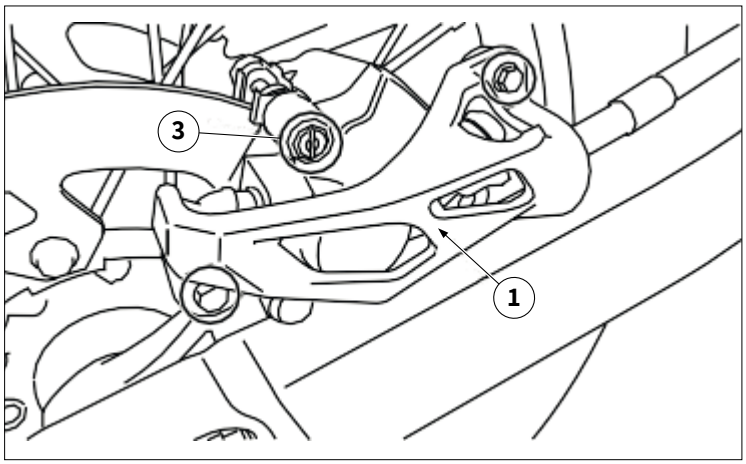

– Install the brake caliper “5” and rear wheel “4”. Tighten the pad pin “3” and install the pad pin plug. Installa the protector “1”.

4.15 TYRES

– Check the tire while it is cold;

Model/version	Front tyre standard pressure	Rear tyre standard pressure
XXF 250	100 kPa (1.00 kgf/cm², 15 psi)	100 kPa (1.00 kgf/cm², 15 psi)
XEF 250 with race use configuration	100 kPa (1.00 kgf/cm², 15 psi)	100 kPa (1.00 kgf/cm², 15 psi)
XEF 250 with road use configuration	200 kPa (2.00 kgf/cm², 29 psi)	220 kPa (2.20 kgf/cm², 32 psi)
XXF 450	100 kPa (1.00 kgf/cm², 15 psi)	100 kPa (1.00 kgf/cm², 15 psi)
XEF 450 with race use configuration	100 kPa (1.00 kgf/cm², 15 psi)	100 kPa (1.00 kgf/cm², 15 psi)
XEF 250 with road use configuration	200 kPa (2.00 kgf/cm², 29 psi)	220 kPa (2.20 kgf/cm², 32 psi)

– Loose bead stoppers allow the tire to slip off its position on the rim when the tire pressure is low;
– A tilted tire valve stem indicates that the tire slips off its position on the rim;
– If the tire valve stem is found tilted, the tire is considered to be slipping off its position. Correct the tire position.

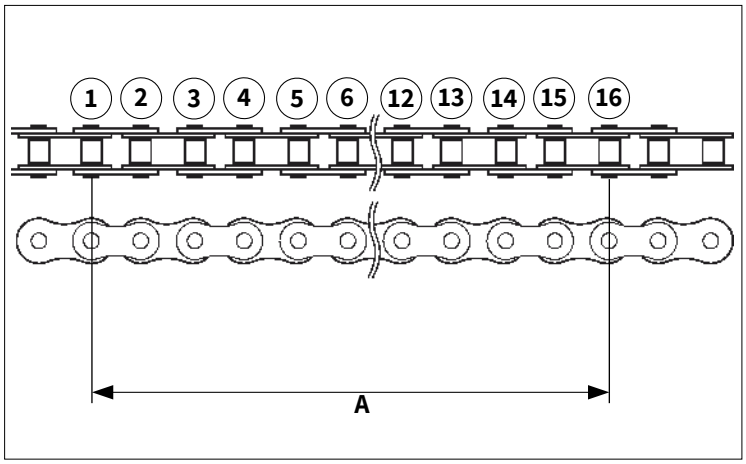

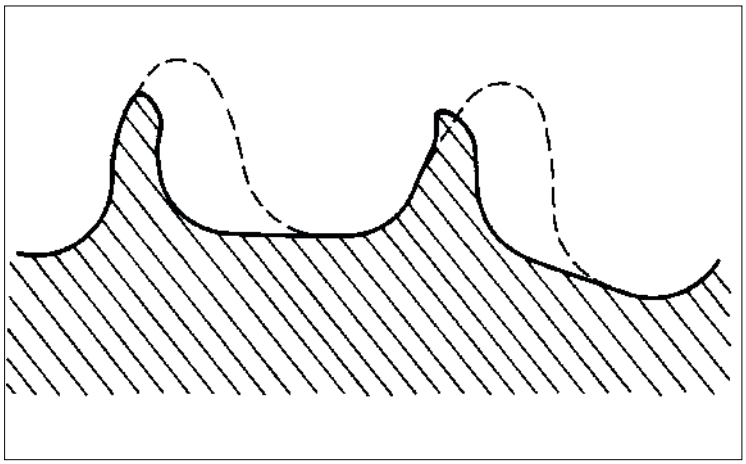

4.16 CHAIN, CROWN AND SPROCKET

Chain check

– Measure the length of 15 joints “A” of the transmission chain, if the length “A” is longer than the service limit, replace the chain.

While measuring the drive chain length, push down on the drive chain to increase its tension.

Measure the length between drive chain roller “1” and “16” as shown.

Perform this measurement at two or three different places.

Service limit (XEF 250 / XEF 450 versions): 239.3 mm (9.42 in)

Service limit (XXF 250 / XXF 450 versions): 242.9 mm (9.56 in)

Pinion and crown check

– Check the pinion and crown teeth. If they are damaged and/or excessively worn, replace them.

Always replace chain, rim and pinion all together. This will ensure uniform wear of the components and a longer service life of the components.

4.17 CLEANING AND VEHICLE STORAGE

Frequent cleaning of your machine will enhance its appearance, maintain good overall performance, and extend the life of many components.

1. Before washing the machine, block off the end of the exhaust pipe to prevent water from entering. A plastic bag secured with a rubber band may be used for this purpose.
2. If the engine is excessively greasy, apply some degreaser to it with a paint brush. Do not apply degreaser to the chain, sprockets, or wheel axles.
3. Rinse the dirt and degreaser off with a garden hose; use only enough pressure to do the job.

⚠ **Do not use high-pressure washers or steam-jet cleaners since they cause water seepage and deterioration seals.**

4. After the majority of the dirt has been hosed off, wash all surfaces with warm water and a mild detergent. Use an old toothbrush to clean hard-to-reach places.
5. Rinse the machine off immediately with clean water, and dry all surfaces with a soft towel or cloth.
6. Immediately after washing, remove excess water from the chain with a paper towel and lubricate the chain to prevent rust.
7. Clean the seat with a vinyl upholstery cleaner to keep the cover pliable and glossy.
8. Automotive wax may be applied to all painted or chromed surfaces. Avoid combination cleanerwaxes, as they may contain abrasives.
9. After completing the above, start the engine and allow it to idle for several minutes.

4.18 LONG TIME VEHICLE INACTIVITY

⚠ **If your machine is to be stored for 60 days or more, some preventive measures must be taken to avoid deterioration.**

After cleaning the machine thoroughly, prepare it for storage as follows:

1. Remove the spark plug, pour a tablespoon of motor oil in the spark plug hole, and reinstall the plug. With the engine stop switch pushed in, kick the engine over several times to coat the cylinder walls with oil.
2. Remove the drive chain, clean it thoroughly with solvent, and lubricate it. Reinstall the chain or store it in a plastic bag tied to the frame.
3. Lubricate all control cables.
4. Block the frame up to raise the wheels off the ground.
5. Tie a plastic bag over the exhaust pipe outlet to prevent moisture from entering.
6. If the machine is to be stored in a humid or salt-air environment, coat all exposed metal surfaces with a film of light oil. Do not apply oil to rubber parts or the seat cover.

⚠ **Make any necessary repairs before the machine is stored.**

INTRODUCTION

The vehicle covered by this manual is designed to achieve maximum performance. Versions approved for use on public roads have performance limits. Any modification to vehicles approved for use on public roads will be considered by Fantic to increase performance.

Vehicles approved for use on public roads that remain in a condition of conformity may be covered by the FANTIC 24 MONTHS COMMERCIAL WARRANTY (see conditions described below).

Vehicles not approved for use on public roads, or vehicles approved but subsequently modified with original Fantic components, are intended for use to achieve maximum performance which cannot be covered by the legal warranty. In these cases, Fantic will provide a 3 MONTH OFF-ROAD FANTIC COMMERCIAL WARRANTY (see conditions described below).

Modello	Fantic commercial warranty duration
XX 125	3 mesi
XE 125 (approved configuration)	24 mesi
XE 125 (with original Fantic racing kit)	3 mesi
XX 250	3 mesi

The dealer is responsible for activating the FANTIC MOTOR warranty within one week of sale and/or registration.

La mancata o non corretta attivazione della garanzia comporta la perdita della copertura di garanzia sul veicolo.

FANTIC 24-MONTH COMMERCIAL WARRANTY

Fantic Motor S.p.A. located in via Tarantelli no. 7, 31030 Dosson di Casier-TV (hereinafter referred to as Fantic), although it is not the final seller to the consumer, intends to support the final seller's responsibilities with its own warranty called Fantic Commercial Warranty, provided through its authorised technical assistance network under the conditions set out below. This warranty is in addition to and does not affect the rights of the purchaser under the laws of the territory in which the purchase took place (in the European territory in compliance with EU Directive n 2019/771).

1. Warranty content

1.1. Fantic warrants the quality, the absence of defects and the proper operation of its products and undertakes to eliminate any design or manufacturing defects.

1.2. This commercial warranty covers all the products in the official Fantic lists sold in the territory of the European Union and in countries where there is an official Fantic distributor of the warranted product (see http://fantic.com).

1.2.1. On e-bikes, some vehicle components are covered by the warranty provided directly by the component manufacturer (e.g. transmission, brakes, forks, shock absorbers). These components are not covered by Fantic's commercial warranty. Your Fantic dealer will be able to provide more information at the time of purchase.

1.3. Warranty Commencement and Duration

1.3.1. The warranty begins on the date of purchase.

- The duration of the guarantee coincides with the months stipulated in the legal guarantee in the country in which the vehicle is sold.
- Spare parts are guaranteed for 24 months from the date of invoice of Fantic to the first purchaser.
- For vehicles equipped with an electric powertrain, the battery pack is warranted for the same period as the vehicle or up to 300 charge cycles, whichever occurs first. The batteries are designed to retain at least 60% of their nominal capacity at the end of the warranty period.

1.3.2. Replacement of parts under warranty extends the warranty period of the replaced part by 12 months.

1.3.3. However, repairs carried out under warranty shall not entitle the customer to:

- extensions or renewals of the warranty on the entire product.
- an alternative means of transport for the period of the repair
- reimbursement of the costs of transporting the product to the service centre

1.4. Parts replaced under warranty will remain the property of Fantic.

1.5. Fantic reserves the right to provide components under warranty that are different from the defective ones but with the same functional characteristics.

2. Effectiveness

2.1. The customer must be in possession of the proof of purchase: invoice or receipt showing the date of purchase and vehicle identification data (frame serial number or VIN).

2.2. It is not possible to make use of the Fantic Commercial Warranty if more than 36 months have passed from the date of invoicing of the product by Fantic to the first purchaser. The end buyer will be responsible for checking with the seller whether the product can access the benefits of Fantic's commercial warranty.

2.3. The warranty and the respective conditions may be transferred to any subsequent purchasers. The warranty period is in any case calculated from the date of the first purchase. The end buyer will be responsible for obtaining proof of the first purchase from the previous owner.

2.4. The first start-up of the product must be carried out by a Fantic dealer.

2.5. The Commercial warranty expires under the following conditions:

- Incorrect use of the product not in accordance with the instructions or use not in accordance with the purposes for which the product was designed.
- Use in races or sporting competitions or for commercial purposes (e.g. rental).
- Tampering or incorrect adjustments or repairs carried out on the product by personnel not authorised by Fantic.
- Use of spare parts or accessories not original or not recommended by Fantic.
- Regular maintenance (if required) has not been carried out by a Fantic Service Centre.
- If product serial numbers (or VIN) have been removed or tampered with from the product

2.6. During the warranty period, the customer must report the non-conformity within 2 (two) months from the date of its discovery. The action shall be terminated if, after this period, the right is not exercised.

2.7. To access the warranty, the user must be able to show the Authorised Service Centre the relevant tax documentation proving the date of purchase.

2.8. The commercial warranty is not valid if the product is located outside the European Union or in a country where there is no official Fantic distributor of the warranted product (see http://fantic.com).

3. Exclusions

3.1. The following are excluded from this warranty:

- Routine maintenance
- Malfunctions due to normal wear and tear (tyres, inner tubes, chain, brake discs, brake pads, rubber parts, etc.).
- Rust, oxidation and degradation.
- Damage due to the use of liquids containing impurities/debris capable of damaging its components.
- Damage due to forced or prolonged interruption of operation.
- Noise, vibrations or deterioration that do not affect the functionality and driveability of the vehicle.
- Slight seepage of liquids from seals or oil seals that do not alter the required levels.
- Non-conformity of the product with respect to specifications requested by the customer, accepted by the seller, but not foreseen by the normal use of the vehicle and/or not conforming to the purposes for which the product was designed.
- Indirect costs incurred (breakdown assistance, replacement rental vehicle, etc.) and/or economic disadvantages suffered (loss of use, loss of earnings, loss of time, etc.) as a result of a product defect within the guarantee period.

4. Disputes

The Court of Treviso shall have jurisdiction for any legal action. The pending legal action does not exempt the client from payment obligations.

FANTIC 3-MONTH OFF-ROAD COMMERCIAL WARRANTY

Fantic Motor S.p.A. located in via Tarantelli no. 7, 31030 Dosson di Casier-TV (hereinafter referred to as Fantic), although it is not the final seller to the consumer, intends to support the final seller's responsibilities with its own warranty called Fantic Off-Road Commercial Warranty, provided through its authorised technical assistance network under the conditions set out below. This warranty is in addition to and does not affect the rights of the purchaser under the laws of the territory in which the purchase took place (in the European territory in compliance with EU Directive n 2019/771).

5. Warranty content

5.1. Fantic warrants the quality, the absence of defects and the proper operation of its products and undertakes to eliminate any design or manufacturing defects.

5.1.1. This commercial guarantee covers all products which are not approved for use on public roads, or vehicles which are approved but subsequently modified with original Fantic components, sold within the European Union and in countries where there is an official Fantic distributor of the warranted product (see http://fantic.com).

5.1.2. This commercial warranty covers all vehicle components that have not been subjected to severe conditions of use searching for performance.

5.2. Warranty Commencement and Duration

5.2.1. The warranty begins on the date of purchase.

- The duration of the guarantee is 3 months.

5.2.2. Replacement of parts under warranty extends the warranty period of the replaced part by 3 months.

5.2.3. However, repairs carried out under warranty shall not entitle the customer to:

- extensions or renewals of the warranty on the entire product.
- an alternative means of transport for the period of the repair
- reimbursement of the costs of transporting the product to the service centre

5.3. Parts replaced under warranty will remain the property of Fantic.

5.4. Fantic reserves the right to provide components under warranty that are different from the defective ones but with the same functional characteristics.

6. Effectiveness

6.1. The customer must be in possession of the proof of purchase: invoice or receipt showing the date of purchase and vehicle identification data (frame serial number or VIN).

6.2. It is not possible to make use of the Fantic Off-Road Commercial Warranty if more than 36 months have passed from the date of invoicing of the product by Fantic to the first purchaser. The end buyer will be responsible for checking with the seller whether the product can access the benefits of the Fantic Off-Road Commercial Warranty.

6.3. The first start-up of the product must be carried out by a Fantic dealer.

6.4. The Commercial warranty expires under the following conditions:

- Incorrect use of the product not in accordance with the instructions or use not in accordance with the purposes for which the product was designed.
- Tampering or incorrect adjustments or repairs carried out on the product by personnel not authorised by Fantic.
- Use of spare parts or accessories not original or not recommended by Fantic.
- Regular maintenance (if required) has not been carried out by a Fantic Service Centre.
- If product serial numbers (or VIN) have been removed or tampered with from the product

6.5. During the warranty period, the customer must report the non-conformity within 15 (fifteen) days from the date of its discovery. The action shall be terminated if, after this period, the right is not exercised.

6.6. To access the warranty, the user must be able to show the Authorised Service Centre the relevant tax documentation proving the date of purchase.

6.7. The commercial warranty is not valid if the product is located outside the European Union or in a country where there is no official Fantic distributor of the warranted product (see http://fantic.com).

7. Exclusions

7.1. The following are excluded from this warranty:

- Routine maintenance
- Malfunctions due to normal wear and tear (tyres, inner tubes, chain, brake discs, brake pads, rubber parts, etc.).
- Rust, oxidation and degradation.
- Damage due to the use of liquids containing impurities/debris capable of damaging its components.
- Noise, vibrations or deterioration that do not affect the functionality and driveability of the vehicle.
- Slight seepage of liquids from seals or oil seals that do not alter the required levels.
- Non-conformity of the product with respect to specifications requested by the customer, accepted by the seller, but not foreseen by the normal use of the vehicle and/or not conforming to the purposes for which the product was designed.
- Indirect costs incurred (breakdown assistance, replacement rental vehicle, etc.) and/or economic disadvantages suffered (loss of use, loss of earnings, loss of time, etc.) as a result of a product defect within the guarantee period.

8. Disputes

The Court of Treviso shall have jurisdiction for any legal action. The pending legal action does not exempt the client from payment obligations.

Intervention request

If a fault should occur with your vehicle, contact your FANTIC MOTOR dealer which, after ensuring that the part or parts causing the fault are covered by the dedicated warranty, will report the problem to the FANTIC MOTOR After-Sales Service requesting authorisation to carry out warranty work.

No warranty service may be carried out without prior authorisation.

Warnings for maintenance and care

The purchaser is responsible for ensuring that maintenance work is carried out at the prescribed intervals and documented by means of completed, stamped and proof of purchase receipts.

- Always inspect your motorcycle before each use. This check is especially important for your safety.
- Before starting maintenance work, allow the motorcycle to cool down to avoid burns.
- Self-locking nuts once removed must be replaced by new nuts.
- When removing bolts and nuts secured with threadlocking fluid, these must be refitted and secured in the same way.
- When washing the motorcycle, do not use a high-pressure cleaner, as the water may penetrate into the bearings, carburettor, electrical connectors, etc.
- Dispose of oils, grease, filters, fuel, detergents, brake fluid, etc. by following the regulations in force in your country. Also observe the safety regulations on the handling of these substances. Under no circumstances should used oil be dispersed into the sewer system or the environment.

WARRANTY DATA

VEHICLE DATA

Vehicle Type (PRODUCT CODE)

Engine Type (DISPLACEMENT)

VEHICLE IDENTIFICATION NUMBER (V.I.N.)

ENGINE NUMBER

INVOICE DATE AND NUMBER

FIRST REGISTRATION DATE

REGISTRATION PLATE NUMBER

USER DATA

Name and Surname (or Business Name)

Address

Zip Code - City - Country

Phone Number

E-Mail Address

Variation of User name/address

STAMP OF THE DEALER

⚠ **Keep the data in this handbook up to date. Fill in any changes of address or change of user or owner of the vehicle.**

⚠ **If all the spaces are already used, ask your Dealer for a new Warranty Manual.**
Filled and verified before the delivery of the vehicle by:

Date

Sign for Acceptance

SERVICE

Registration of service

⚠ **Give the handbook to your dealer at each service.**

⚠ **It is the responsability of the user to inform the Dealer of any maintenance carried out so that it is not repeated unnecessarily.**

Next service	
1 Dealer's stamp	
Hours	Date
Invoice No.	
Routine maintenance ☐	Main maintenance ☐
Spark plug ☐	Air filter ☐

Next service	
2 Dealer's stamp	
Hours	Date
Invoice No.	
Routine maintenance ☐	Main maintenance ☐
Spark plug ☐	Air filter ☐

Next service	
3 Dealer's stamp	
Hours	Date
Invoice No.	
Routine maintenance ☐	Main maintenance ☐
Spark plug ☐	Air filter ☐

Next service	
4 Dealer's stamp	
Hours	Date
Invoice No.	
Routine maintenance ☐	Main maintenance ☐
Spark plug ☐	Air filter ☐

Next service	
5 Dealer's stamp	
Hours	Date
Invoice No.	
Routine maintenance ☐	Main maintenance ☐
Spark plug ☐	Air filter ☐

Next service	
6 Dealer's stamp	
Hours	Date
Invoice No.	
Routine maintenance ☐	Main maintenance ☐
Spark plug ☐	Air filter ☐

Next service	
7 Dealer's stamp	
Hours	Date
Invoice No.	
Routine maintenance ☐	Main maintenance ☐
Spark plug ☐	Air filter ☐

Next service	
8 Dealer's stamp	
Hours	Date
Invoice No.	
Routine maintenance ☐	Main maintenance ☐
Spark plug ☐	Air filter ☐

Next service	
9 Dealer's stamp	
Hours	Date
Invoice No.	
Routine maintenance ☐	Main maintenance ☐
Spark plug ☐	Air filter ☐

Next service	
10 Dealer's stamp	
Hours	Date
Invoice No.	
Routine maintenance ☐	Main maintenance ☐
Spark plug ☐	Air filter ☐

Next service	
11 Dealer's stamp	
Hours	Date
Invoice No.	
Routine maintenance ☐	Main maintenance ☐
Spark plug ☐	Air filter ☐

Next service	
12 Dealer's stamp	
Hours	Date
Invoice No.	
Routine maintenance ☐	Main maintenance ☐
Spark plug ☐	Air filter ☐

Next service	
13 Dealer's stamp	
Hours	Date
Invoice No.	
Routine maintenance ☐	Main maintenance ☐
Spark plug ☐	Air filter ☐

Next service	
14 Dealer's stamp	
Hours	Date
Invoice No.	
Routine maintenance ☐	Main maintenance ☐
Spark plug ☐	Air filter ☐

Next service	
15 Dealer's stamp	
Hours	Date
Invoice No.	
Routine maintenance ☐	Main maintenance ☐
Spark plug ☐	Air filter ☐